US007322085B1

(12) **United States Patent**
Benson

(10) **Patent No.: US 7,322,085 B1**
(45) **Date of Patent: Jan. 29, 2008**

(54) **PORTABLE HOSE FITTING INSERTER**

(76) Inventor: **Joel Kent Benson**, 601 S. Ridgeway Dr., Cleburne, TX (US) 76033

(*) Notice: Subject to any disclaimer, the term of this patent is extended or adjusted under 35 U.S.C. 154(b) by 340 days.

(21) Appl. No.: **10/940,203**

(22) Filed: **Sep. 13, 2004**

Related U.S. Application Data

(63) Continuation-in-part of application No. 10/732,675, filed on Dec. 9, 2003, now abandoned, which is a continuation-in-part of application No. 10/074,570, filed on Feb. 12, 2002, now Pat. No. 6,658,711.

(60) Provisional application No. 60/539,558, filed on Jan. 27, 2004.

(51) **Int. Cl.**
B23P 19/04 (2006.01)

(52) **U.S. Cl.** **29/237**; 29/270; 269/6; 269/3

(58) **Field of Classification Search** 269/6, 269/3, 902, 165–171.5; 29/237, 270
See application file for complete search history.

(56) **References Cited**

U.S. PATENT DOCUMENTS

1,094,978	A	4/1914	Church	
2,821,775	A	2/1958	Pavelka	
2,916,812	A	12/1959	Milo	
2,949,947	A	8/1960	Story	
4,083,624	A *	4/1978	Timmer	439/803
4,811,441	A	3/1989	Potesta	
4,854,568	A	8/1989	Baeza et al.	
4,893,801	A *	1/1990	Flinn	269/6
5,009,134	A	4/1991	Sorensen et al.	
5,099,561	A	3/1992	Santiago Lozano	
5,161,787	A *	11/1992	Hobday	269/6
5,222,420	A	6/1993	Sorensen et al.	
5,375,309	A	12/1994	Dunn	
5,833,359	A	11/1998	Hollenbach	
6,029,964	A	2/2000	Bohl	
6,658,711	B1 *	12/2003	Benson	29/237
2002/0042979	A1 *	4/2002	Ishida et al.	29/237

* cited by examiner

Primary Examiner—Lee D. Wilson
(74) *Attorney, Agent, or Firm*—Deborah A. Peacock; Justin R. Jackson; Peacock Myers, P.C.

(57) **ABSTRACT**

A portable hose fitting insertion apparatus and method. The apparatus can be hand held and operated in areas such that hose repairs can be made without removal of the hose. A friction operated ratcheting mechanism is preferably used to drive a shaft forward. A pad is preferably disposed on an end of the shaft and pushes on an outer surface of the fitting. A clamping mechanism is preferably disposed on a terminal portion of the apparatus and holds an end portion of a hose in place while a fitting is inserted.

35 Claims, 2 Drawing Sheets

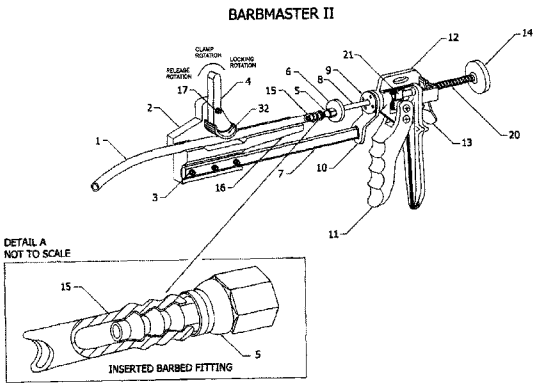

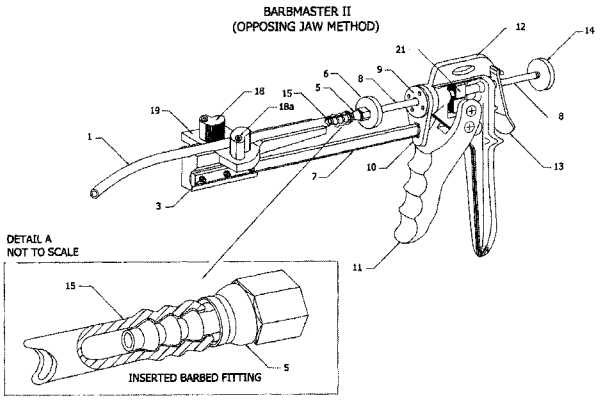

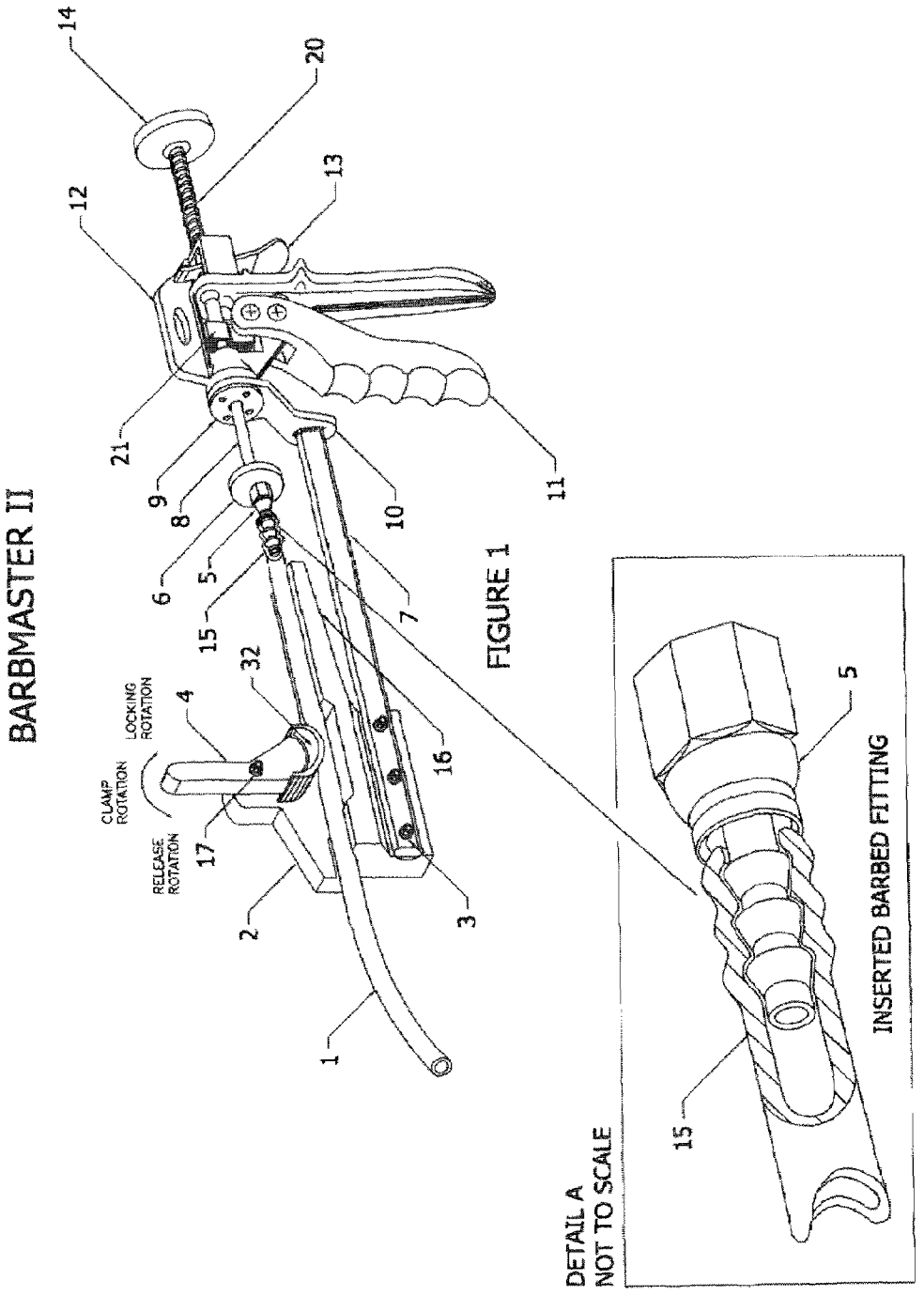
BARBMASTER II
14
20
12
13
21
9
8
6
5
15
32
4
LOCKING ROTATION
CLAMP ROTATION
RELEASE ROTATION
17
2
1
3
16
7
10
11
DETAIL A
NOT TO SCALE
15
5
INSERTED BARBED FITTING

FIGURE 1

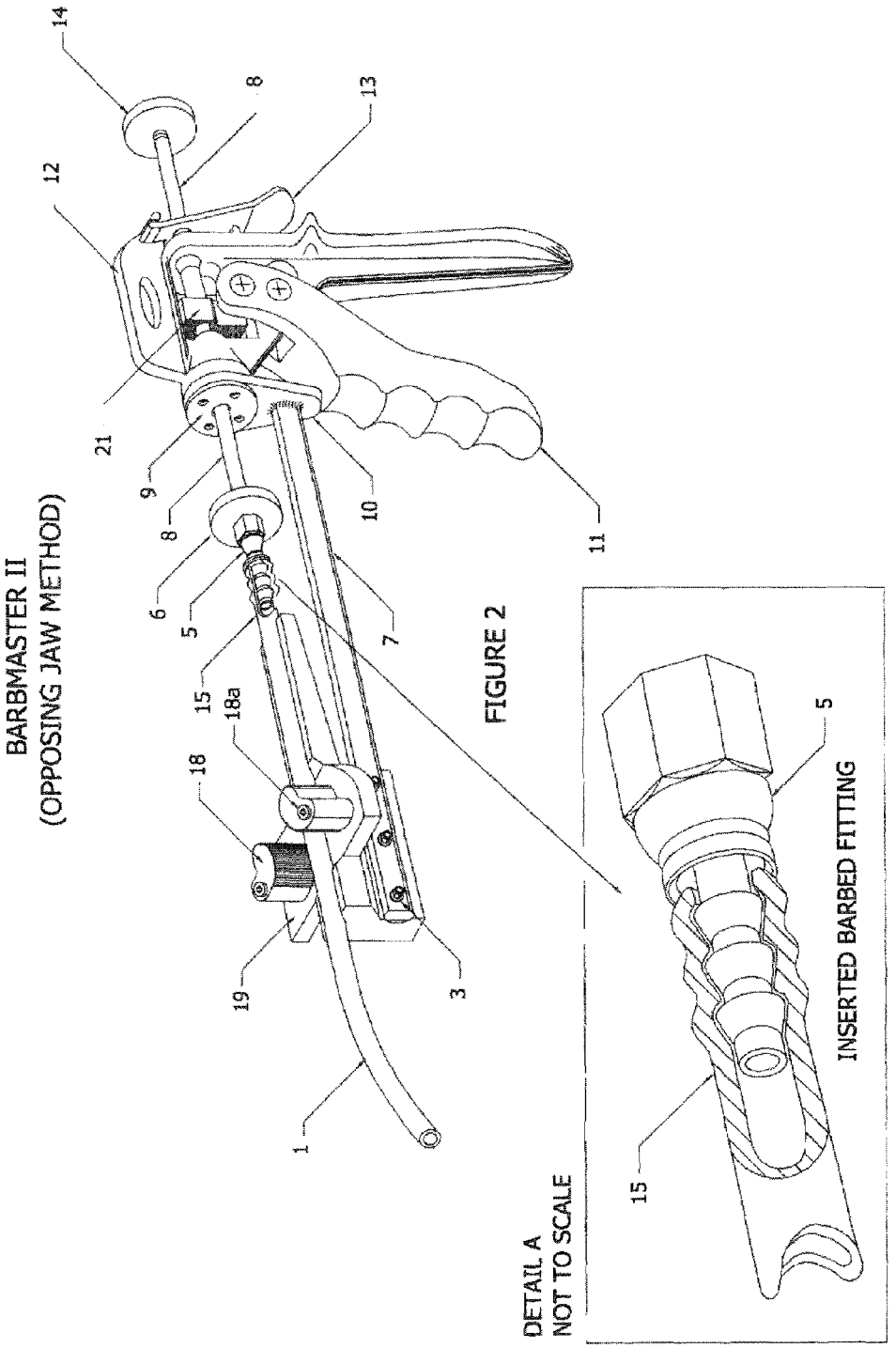
BARBMASTER II
(OPPOSING JAW METHOD)
14
8
13
12
21
9
8
10
11
6
5
7
15
18a
18
19
3
1
DETAIL A
NOT TO SCALE
5
15
INSERTED BARBED FITTING

FIGURE 2

PORTABLE HOSE FITTING INSERTER

CROSS-REFERENCE TO RELATED APPLICATIONS

This application is a continuation-in-part application of U.S. patent application Ser. No. 10/732,675, entitled "Method and Apparatus for Installing Hose Fittings", to Joel Kent Benson, filed on Dec. 9, 2003 now abandoned, which itself is a continuation-in-part application of U.S. patent application Ser. No. 10/074,570, entitled "Hose Fitting Insertion Apparatus", to Benson, filed on Feb. 12, 2002 now U.S. Pat. No. 6,658,711, and the specifications and claims thereof are incorporated herein by reference. This application also claims the benefit of the filing of U.S. Provisional Patent Application Ser. No. 60/539,558, entitled "Hose Fitting Inserter", filed on Jan. 27, 2004, and the specification thereof is incorporated herein by reference.

BACKGROUND OF THE INVENTION

1. Field of the Invention (Technical Field):

The present invention relates to a method and apparatus for installing a hose fitting into the open end of a hose. Particularly, the present invention relates to a method and apparatus for rapid installation of a fitting into a hose with a portable handheld device.

2. Description of Related Art

Hose fitting installation apparatuses are known in the art. U.S. Pat. No. 4,811,441, to Potesta is one such known hose fitting installation apparatus. The apparatus of Potesta and others, however, must typically be mounted onto a work-bench or table. Users of such equipment must typically deal with the end portion of the hose buckling, bending, and compressing under the force of the fitting being inserted therein. Further, devices currently known are not only difficult to use and lack portability, but also make it impossible to service a hose located adjacent to or inside a piece of machinery. Since repair of hoses in "mid-air" is not typically possible with the devices of the prior art, and because hoses are typically located adjacent to or inside a piece of machinery, a user is often forced to remove an entire section of hose. Since such hoses must be disconnected, drained, and removed from their routing retainers, before taking them from the field and into a repair shop, where the bench holding the fitting installation device is typically disposed, there is thus a present need for an easily operable, hand-controlled apparatus, which is entirely portable for use in any needed location, e.g. in the engine room of a ship, the air lines of a tractor-trailer rig, or within or on a piece of equipment that needs repairing. Further, there is a need for such an apparatus with which the operator may both hold the hose end securely in position to receive the hose fitting, and also quickly push the hose fitting into the secured end of the hose, to permanently install the fitting in the hose.

BRIEF DESCRIPTION OF THE SEVERAL VIEWS OF THE DRAWINGS

The accompanying drawings, which are incorporated into and form a part of the specification, illustrate one or more embodiments of the present invention and, together with the description, serve to explain the principles of the invention. The drawings are only for the purpose of illustrating one or more preferred embodiments of the invention and are not to be construed as limiting the invention. In the drawings:

FIG. **1** is a drawing showing a perspective view of a preferred embodiment of the present invention; and

FIG. **2** is a drawing showing a perspective view of an alternative embodiment of the present invention.

BRIEF SUMMARY OF THE INVENTION

The present invention relates to an apparatus which includes a mounting bar, a fitting inserter attached to a first end of the mounting bar, and a hose securer attachable to a second end of the mounting bar. The mounting bar includes a platform, one or more cam-shaped members, a translationally movable shaft, a pushing mechanism for imparting translational movement to the shaft, and a release mechanism. The apparatus can also include a pad disposed on a first end of the shaft; a stop disposed on a second end of the shaft, and could incorporate a retraction spring. The retraction spring can be disposed around the shaft and is preferably located on the backside of the pusher mechanism. Optionally, the cam-shaped members can have a textured surface. Further, the hose securer can optionally include one or more springs, and the cam-shaped members can reside in a communicable relationship with the springs.

The pushing mechanism can include a friction drive mechanism or a notched push-rod in communicable relationship to a round or semicircular drive gear. The hose securer can also include a lever, and the cam-shaped members can be disposed on a terminal portion of that lever. Optionally, the cam-shaped members of the present invention can be disposed on the platform. The hose securer can also include an extended hose-supporting member, called an ergonomic-wing, having one or more surfaces residing in a substantially parallel relationship with the mounting bar. The supporting member can include a trough. The trough can have virtually any shape including a v-shape and/or a u-shape.

The apparatus of the present invention can be hand powered, electrically powered, hydraulically powered, pneumatically powered, or any combination of these. The apparatus of the present invention can be mountable on a surface with the use of a table-vise or other securing mechanism. The pushing mechanism can be attached to the mounting bar with a spanner nut.

The present invention also relates to a method for inserting a fitting into a hose end which includes holding a fitting insertion tool comprising a fitting inserter and a hose securer in a user's first hand, wherein all of a weight of the tool is supported by the users hand; providing a hose having at least a first end; disposing a first end of the hose into the hose securer; disposing a fitting partially within the first end of the hose; actuating a pushing mechanism; pressing the fitting into the first end of the hose with the pushing mechanism; and removing the hose from the hose securer. The method can also include activating a release mechanism for both the hose securer and the fitting pusher mechanism.

Pressing the fitting into the first end of the hose can include the users hand repetitiously squeezing a handle portion of the fitting inserter. Disposing a first end of the hose into a hose securer can include contacting an outer surface of the hose with at least one cam-shaped compression member.

The present invention also relates to a method for inserting a fitting into a hose which includes disposing a hose having at least a first end into a hose securing mechanism; disposing a fitting at least partially within the first end of the hose; and advancing the fitting into the first end of the hose in a series of distinct advancements of substantially equal

distances. The method can also include an additional clamping mechanism for securing an end portion of the hose with the hose securing mechanism, and/or retracting a translationally movable shaft.

In the method, advancing the fitting can include advancing the fitting with a translationally movable shaft, and/or repetitiously activating a pushing mechanism. Repetitiously activating a pushing mechanism can include repetitiously activating a hand-powered pushing mechanism, and/or repetitiously activating a pushing mechanism by hand.

The present invention is directed to an apparatus and method for inserting hose fittings into hose ends. Particularly, the present invention is directed toward a portable handheld apparatus which can install fittings into hoses in readily accessible and/or difficult to reach areas.

An objective of the present invention is to provide a method and apparatus for inserting hose fittings into hoses. Particularly, an objective of the present invention is to provide a user with the ability to insert fittings into hoses without requiring a user to completely remove the hose from the system.

A primary advantage of the present invention is that a method and apparatus are provided which enables hose fittings to be inserted into hoses of multiple diameters, even when the hose is in an area which is relatively difficult to access.

Other objects, advantages and novel features, and further scope of applicability of the present invention will be set forth in part in the detailed description to follow, taken in conjunction with the accompanying drawings, and in part will become apparent to those skilled in the art upon examination of the following, or may be learned by practice of the invention. The objects and advantages of the invention may be realized and attained by the instrumentalities and combinations particularly pointed out in the appended claims.

DETAILED DESCRIPTION OF THE INVENTION

The term "hose" as used throughout the specification, is meant to encompass all forms of hoses, tubes, and piping, including, but not limited to all forms of flexible and semi-flexible piping. The term "v-shaped channel" as used throughout the specification of the present invention, has been chosen solely for the purpose of maintaining consistency, and can also include any such apparatus which would perform a similar function such as a u-shaped channel, a flat plate, a completely or substantially enclosed structure such as a pipe, etc. Although the apparatus of the present invention is relatively small and thus readily portable, the apparatus of the present invention can also be secured to a base structure with the aid of a table-vise and/or fasteners and fastening methods readily understood to those skilled in the art. While the present invention teaches the use of a pad for pressing a fitting into a hose end, it is not mandatory that such surface be padded. Rather, this padding better enables the present invention to produce more desirable results since minimum damage will occur to the fitting from contact with this padded surface. The term "pad" as used throughout the specifications and claims is therefore not meant to be limited to only items having very low hardness values, but can also include items having greater hardness values. Such pads can therefore include but are not limited to rubbers, foams, plastics, composites, metals, ceramics, and woods.

The term "stop" as used throughout the specification and claims is intended to include any device, apparatus, fixture or element which can be used to prevent a shaft from traveling beyond a predetermined point. The term "stop" is also used for the sake of consistency and is also intended to include any device, apparatus, mechanism, handle, or element which can be gripped by a user.

FIG. **1** shows one embodiment of the present invention. The hand-controlled movable fitting inserter of the present invention preferably has pad **6** for pressing fitting **5** into end portion **15** of hose **1**. This embodiment of the present invention also has handle **11** and release mechanism **13** connected to pushing mechanism **10**. By repetitiously squeezing handle **11**, translational movement is imparted to shaft **8**, thus causing pad **6** to move toward hose end **15**. Platform **16** is attached to bar **17**, preferably by bolts **3**. Platform **16** preferably has a protrusion, called an ergonomic-wing, with a v-shaped trough disposed thereon, which aids in holding end portion **15** of hose **1**. Hose locking lever **4** is rotatably attached to platform **16** by bolt and spacer assembly **17**. Lever **4** preferably has at its bottom, cam-shaped compression member **32**, which aids in securing end-portion **15** of hose **1** in the v-shaped trough during installation of fitting **5**. As seen in FIG. **1**, platform **16** is preferably disposed and configured such that its protruding ergonomic-wing lies substantially parallel to mounting bar **7**.

Lever **4** is preferably so disposed as to allow end portion **15** of hose **1** to be passed onto the flat surface beneath compression member **32**. In one embodiment, when the upper end of lever **4** is moved away from pushing mechanism **10**, as shown in FIG. **1**, compression member **32** is moved to the right and upward, thus providing a maximum opening between compression member **32** and the trough, with the dimensions being such as to accommodate a multitude of hose sizes. While the present invention can be made to accept virtually any hose diameter, the present invention preferably accepts hoses having an inside diameter of ¼"-1". When the upper end of lever **4** is moved to the right, compression member **32** is caused to move to the left and downward, so as to firmly press end portion **15** of hose **1** downward into a locked configuration in the v-shaped trough and flat portion of the mounting platform.

The more force that is applied to hose end-portion **15**, via pad **6** through filling **5**, during motion operation of the present invention, the further back elliptical compression member **32** is pushed, and as a result the pressure applied to locking hose **1** in place increases. The mechanical action of cam-shaped compression member **32** thus ensures that the hose will not slip rearward during the fitting insertion process. In addition, spacing adapter pads are optionally incorporated below the compression member in order to accommodate the various hose sizes.

An alternative embodiment of the present invention is depicted in FIG. **2**. In this embodiment, the insertion mechanism preferably remains the same as that previously disclosed. Lever **4** is preferably replaced with cams **18** which are mounted on platform **19**. Platform **19** preferably has cams **18** that are preferably spring loaded in a closed position in order to secure hose **1**. After hose **1** is fed through cams **18**, cams **18** preferably close and hold hose **1**. When fitting **5** is forced into end portion **15** of hose **1**, cams **18** are preferably forced to rotate inward slightly, thus imparting a pinching force to hose **1** which prevents it from retreating away from pad **6**.

An alternative embodiment of the present invention uses a hose securing mechanism which operates in a manner similar to that of the known as Irwin's® Quick-Grip Handi-Clamp. In this embodiment, a two-piece, internally textured

hollowed-cylinder block having a shape similar to that of a clamshell is used. A hand-powered locking mechanism for the opposing members is preferably provided. Handles are preferably attached to the upper and lower members and are preferably coupled to a quick-releasing, semi-circular, toothed, locking member. When opposing mating surfaces are brought together around hose **1**, the locking parts preferably engage one another and the clamshell shape secures the hose in place.

Of course any of the hose securing mechanisms described above can easily be converted to operate from a pneumatic, electric (AC or DC), or hydraulic source, as well as combinations of these. Those skilled in the art will readily recognize numerous mechanisms which can be used to hold hose **1** while fitting **5** is being forced therein.

Pushing mechanism **10** is preferably a type well known in the art, which has one-way friction-powered drive mechanism **21**. Although numerous manufacturers produce drive mechanisms, each of which will produce desirable results, the drive mechanism is preferably a Model No. JM-138-CH, as manufactured by Tianjin Jinmao Imp.& Exp. Corp., Ltd., Wang Zhuang Industrial Area, Beichen District, Tianjin 300134, China. It is also important to note that although the embodiment depicted in the figures is that which incorporates friction-powered drive mechanism **21**, other drive mechanisms can work and will also produce desirable results. Although those skilled in the art will readily recognize numerous mechanisms which can be adapted for use with the present invention, examples of drive mechanisms which can be used include electrically, pneumatically, and hydraulically powered mechanisms as well as manually operated screw-type mechanisms and combinations of these. Further, a shaft can be provided which has toothed protrusions extending along the length of the shaft which interact with a ratchet-type mechanism incorporating some type of drive gear. If a powered mechanism is used, a trigger is preferably disposed on the apparatus which enables a user to operate the powered mechanism by simply squeezing the trigger. Each of the mechanisms can optionally operate in reverse such that shaft **8** is pulled away from hose end portion **15** when the mechanism is operated. Regardless of the manner of operation of the drive mechanism, the drive mechanism ultimately selected preferably has the ability to cause pad **6** to be shoved in a direction substantially parallel with bar **7**.

When using a hand-powered apparatus, successive hand compressions of handle **11** cause pad **6** to travel away from handle **11**. Activating release mechanism **13** with one hand and pulling on stop **14** with the other hand enables the operator to slide shaft **8** away from platform **16**. Since pad **6** is fixedly attached to an end of shaft **8**, pad **6** moves away from hose end portion **15** as shaft **8** is retracted. Stop **14** is preferably fixedly attached to an end of shaft **8** opposite that of pad **6**. Stop **14** not only prevents shaft **8** from traveling too far, and thus leaving the ratcheting mechanism, but also provides a gripping area for a user to pull on when moving pad **6** away from end portion **15** of hose **1**. Although shaft **8** can easily be retracted by pulling on stop **14**, a spring (**20**) can optionally be disposed around shaft **8** such that the spring is compressed by stop **14** as shaft **8** is forced forward. Upon activating release mechanism **13**, potential energy stored in the spring is used to return shaft **8** to its retracted position.

The protruding portion/ergonomic-wing of platform **16** preferably has smooth corners and edges, forming an ergonomic design, which allows the operator to wrap fingers around end portion **15** of hose **1**, which is preferably disposed in the v-shaped tough. This helps to prevent hose **1** from buckling during the fitting insertion operation.

For the embodiment of FIG. **1**, operation of the invention is straightforward. First, the operator rotates lever **4** such that sufficient clearance is provided for end portion **15** to pass beneath compression member **32** and onto the flat surface area of the platform. End portion **15** is preferably positioned about 1.5 inches to 2.5 inches past a terminal portion of the trough. This provides an un-deformed end and enough length for compression dynamics of hose **1** during the insertion of fitting **5**. This placement may, of course, vary depending upon the nature and size of the hose material, as well as the fitting to be installed. Once the hose is suitably positioned in the trough, the operator then rotates the handle of lever **4** in such a manner as to cause compression member **32** of lever **4** to contact and lock end portion **15** of hose **1** in place.

After hose **1** is properly positioned, hose-fitting **5** is preferably lubricated by the operator, using a mild soap and water solution or alcohol. After lubrication has been applied, the operator partially inserts fitting **5** into end portion **15** of hose **1** with the user's hand. Using one hand, the operator preferably wraps and tightens fingers around end portion **15** of hose **1** and the protrusion of platform **16**, so as to insure that end portion **15** will not buckle during the fitting insertion operation. Of course the hand and fingers can be replaced with a mechanical apparatus such as a Velcro® strap-like material, an additional clamp, or a semicircular rigid tube and clamp mechanism having an inside circumference only slightly larger than the outside circumference of the tube. The operator then causes shaft **8** to travel toward platform **16**. For embodiments of the present invention which use a hand-operated mechanism, shaft **8** is preferably made to travel toward platform **16** by repeatedly squeezing and releasing handle **11** with a hand of the operator. This causes pad **6** to first engage an outer surface of fitting **5**. Pad **6** then pushes fitting **5** as far into end portion **15** of hose **1** as is required so that fitting **5** is firmly secured upon the inner wall of end portion **15** of hose **1**. This is illustrated in the enlarged sections of FIGS. **1** and **2**.

After installation of fitting **5** in end-portion **16** of hose **1**, the operator presses release mechanism **13**, which allows shaft **8** and pad **6** to be moved away from platform **16**. This releases the pressure on fitting **5** and hose **1**. The operator then removes hose **1** from the fitting insertion tool. Fitting **5** is now fully inserted into hose **1**.

Although the invention has been described in detail with particular reference to these preferred embodiments, other embodiments can achieve the same results. Variations and modifications of the present invention will be obvious to those skilled in the art and it is intended to cover in the appended claims all such modifications and equivalents. The entire disclosures of all references, applications, patents, and publications cited above are hereby incorporated by reference.

What is claimed is:

1. An apparatus comprising:

a mounting bar;

a fitting inserter attached to a first end of said mounting bar comprising:

a translationally movable shaft;

a pushing mechanism for imparting translational movement to said shaft; and

a release mechanism; and

a hose securer attachable to a second end of said mounting bar comprising:

a platform; and

one or more cam-shaped members comprising one or more surfaces movable between a substantially perpendicular and a substantially parallel relationship with said bar, thereby clamping a work piece.

2. The apparatus of claim **1** further comprising a pad disposed on a first end of said shaft.

3. The apparatus of claim **1** further comprising a stop disposed on a second end of said shaft.

4. The apparatus of claim **1** wherein said pushing mechanism comprises a friction drive mechanism.

5. The apparatus of claim **1** wherein said hose securer further comprises a lever.

6. The apparatus of claim **5** wherein at least one of said cam-shaped members is disposed on a terminal portion of said lever.

7. The apparatus of claim **1** wherein said hose securer further comprises an extended hose supporting member, said supporting member comprising one or more surfaces residing in a substantially parallel relationship with said bar.

8. The apparatus of claim **7** wherein said supporting member comprises a trough.

9. The apparatus of claim **8** wherein said trough comprises a v-shape.

10. The apparatus of claim **8** wherein said trough comprises a u-shape.

11. The apparatus of claim **7** wherein said supporting member comprises a plurality of troughs.

12. The apparatus of claim **11** wherein said troughs lie at terminal portions of said supporting member.

13. The apparatus of claim **1** further comprising a retraction spring.

14. The apparatus of claim **13** wherein said retraction spring is disposed around said shaft.

15. The apparatus of claim **1** wherein said apparatus is hand powered.

16. The apparatus of claim **1** wherein said apparatus is electrically powered.

17. The apparatus of claim **1** wherein said apparatus is hydraulically powered.

18. The apparatus of claim **1** wherein said apparatus is pneumatically powered.

19. The apparatus of claim **1** wherein said apparatus is mountable on a surface.

20. The apparatus of claim **1** wherein said one or more cam-shaped members are disposed on said platform.

21. The apparatus of claim **1** wherein said hose securer further comprises one or more springs.

22. The apparatus of claim **21** wherein said one or more cam-shaped members reside in a communicable relationship with said one or more springs.

23. The apparatus of claim **1** wherein said cams comprise a textured surface.

24. The apparatus of claim **1** wherein said pushing mechanism is attached to said mounting bar with a spanner nut.

25. An apparatus comprising:

a mounting bar;

a fitting inserter attached to a first end of said mounting bar comprising:

a translationally movable shaft;

a pushing mechanism for imparting translational movement to said shaft; and

a release mechanism; and

a hose securer attachable to a second end of said mounting bar comprising:

a platform; and

one or more cam-shaped members comprising one or more surfaces residing in a substantially parallel relationship with said bar.

26. The apparatus of claim **25** further comprising a pad disposed on a first end of said shaft.

27. The apparatus of claim **25** further comprising a stop disposed on a second end of said shaft.

28. The apparatus of claim **25** wherein said hose securer further comprises an extended hose supporting member.

29. The apparatus of claim **25** further comprising a retraction spring.

30. The apparatus of claim **25** wherein said apparatus is hand powered.

31. The apparatus of claim **25** wherein said apparatus is electrically powered.

32. The apparatus of claim **25** wherein said apparatus is hydraulically powered.

33. The apparatus of claim **25** wherein said apparatus is pneumatically powered.

34. The apparatus of claim **25** wherein said apparatus is mountable on a surface.

35. The apparatus of claim **25** wherein said one or more cam-shaped members are disposed on said platform.

* * * * *