US005472294A

United States Patent [19]

Billings et al.

[11] **Patent Number: 5,472,294**

[45] **Date of Patent: * Dec. 5, 1995**

[54] **CONTAMINANT REMEDIATION, BIODEGRADATION AND VOLATILIZATION METHODS AND APPARATUSES**

[75] Inventors: **Jeffery F. Billings**, Scottsdale, Ariz.; **Gale K. Billings**, Albuquerque, N.M.

[73] Assignee: **Environmental Improvement Technologies, Inc.**, Albuquerque, N.M.

[*] Notice: The portion of the term of this patent subsequent to Jun. 22, 2010, has been disclaimed.

[21] Appl. No.: **179,584**

[22] Filed: **Jan. 10, 1994**

Related U.S. Application Data

[63] Continuation-in-part of Ser. No. 800,545, Nov. 27, 1991, Pat. No. 5,277,518, which is a continuation-in-part of Ser. No. 712,919, Jun. 7, 1991, Pat. No. 5,221,159, which is a continuation-in-part of Ser. No. 500,767, Mar. 28, 1990, abandoned.

[51] **Int. Cl.**[6] **E21B 36/00**; E21B 43/00; E21B 43/40

[52] **U.S. Cl.** **405/128**; 166/246; 435/266

[58] **Field of Search** 405/128–131; 435/248, 249, 266, 313; 210/610; 166/227, 246, 305.1, 310, 381

[56] **References Cited**

U.S. PATENT DOCUMENTS

Re. 33,102	10/1989	Visser et al.	166/267
632,388	9/1899	Whitehead .	
2,523,091	9/1950	Bruce	166/2
2,969,226	1/1961	Huntington	262/3
3,216,905	11/1965	Baptist	195/2
3,351,132	11/1967	Dougan et al.	166/11
3,665,716	5/1972	Rogers et al.	61/35
3,678,999	7/1972	Kulikov et al.	166/236
3,743,582	7/1973	Kitai et al.	195/141

(List continued on next page.)

FOREIGN PATENT DOCUMENTS

3427532	8/1985	Germany	405/131

OTHER PUBLICATIONS

Incomplete article, title unknown, *Hydro Processing,* Oct. 1986 pp. 42–46.

Koltunlak, D. L., "In–Situ Air Stripping Cleans Contaminated Soil," *Chemical Engineering,* Aug. 18, 1986, pp. 30–31.

Anastos, G., et al., "A New Technique for Removing Volatile Organic Contaminants from Soils," *The Weston Way* magazine, Winter/Spring 1986, pp. 20–24.

Staff, "Contaminated Soil Treatment System Removes VOCs in EPA Cleanup," *Chemical Processing,* Apr. 1986, pp. 123–124.

Brown, R. A., et al., "Aquifer Restoration with Enhanced Bioreclamation," *Pollution Engineering,* Nov. 1985 pp. 25–28.

(List continued on next page.)

Primary Examiner—John A. Ricci

Attorney, Agent, or Firm—Deborah A. Peacock; Rod D. Baker; Jeffrey D. Myers

[57] **ABSTRACT**

Methods and apparatuses for removing contaminants. At least one injection well is drilled through the vadose zone to a depth below the water table defining the upper boundary of the aquifer. A plurality of venting wells or venting laterals are established to a depth above the water table sufficient to discourage fouling by contaminated water or condensate, and oxygenated substances are injected under pressure through the injection wells. Additional biochemical cleansing may occur at ground level prior to venting of contaminated air. Microbes natural to the contaminated site may be extracted, analyzed, fermented, and reintroduced to enhance biodegradation, and nutrients, food, or both, may be supplied to the microbial population to sustain high levels of degradation activity. Relatively pure liquid contaminant may be separated from other fluids, such as water. Modes of enhancing the lateral dispersion of injected substances are disclosed, for example, hingedly connected radially extendible injection tubes which expand the radius of injection.

97 Claims, 11 Drawing Sheets

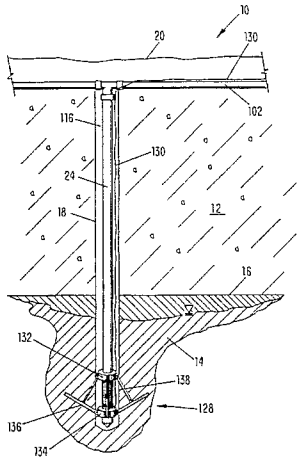

U.S. PATENT DOCUMENTS

3,828,525	8/1974	Copa et al.	55/68
3,846,290	11/1974	Raymond	210/11
4,026,355	5/1977	Johnson et al.	166/246
4,126,556	11/1978	Swanson et al.	210/242 AS
4,183,407	1/1980	Knopik	166/314
4,241,787	12/1980	Price	166/105
4,249,605	2/1981	Slater et al.	166/266
4,289,204	9/1981	Stewart	166/303
4,296,810	10/1981	Price	166/265
4,303,127	12/1981	Freel et al.	166/266
4,323,122	4/1982	Knopik	166/267
4,358,221	11/1982	Wickberg	405/128
4,401,569	8/1983	Jhaveri et al.	210/610
4,435,292	3/1984	Kirk et al.	210/747
4,442,901	4/1984	Zison	166/369
4,469,176	9/1984	Zison et al.	166/250
4,518,399	5/1985	Croskell et al.	55/16
4,544,381	10/1985	Schmidt	55/89
4,588,506	5/1986	Raymond et al.	210/606
4,593,760	6/1986	Visser et al.	166/267
4,660,639	4/1987	Visser et al.	166/267
4,662,900	5/1987	Ottengraf	55/90
4,713,343	12/1987	Wilson, Jr. et al.	435/264
4,723,968	2/1988	Schippert et al.	55/80
4,730,672	3/1988	Payne	166/266
4,745,850	5/1988	Bastian et al.	98/56
4,765,902	8/1988	Ely et al.	210/610
4,778,010	10/1988	Knecht et al.	166/305.1 X
4,806,148	2/1989	Ottengraf	55/223
4,832,122	5/1989	Corey et al.	166/266
4,842,448	6/1989	Koerner et al.	405/258
4,850,745	7/1989	Hater et al.	405/258
4,872,994	10/1989	Jakob	210/691
4,890,673	1/1990	Payne	166/266
4,927,292	5/1990	Justice	405/43
4,982,788	1/1991	Donnelly	166/266
5,067,852	11/1991	Plunkett	405/128
5,076,727	12/1991	Johnson et al.	405/128
5,080,793	1/1992	Urlings	210/603
5,116,163	5/1992	Bernhardt	405/128
5,133,625	7/1992	Albergo et al.	405/128 X
5,221,159	6/1993	Billings et al.	405/128
5,277,518	1/1994	Billings et al.	405/128
5,348,420	9/1994	Bernhardt	405/128 X

OTHER PUBLICATIONS

Jafek, Bev, "VOC Air Stripping Cuts Costs," *Waste Age,* Oct. 1986 pp. 66–67.
Feature: "Groundwater Contamination: An Industry Update", pp. 54–58 text only.
Billings & Assoc., "SVVS Remediation Technology" (1990).
Billings & Assoc., "Developments in Remediation" (1990).
Coia, et al., "Soil Decontamination Through in Situ Air Stripping of Volatile Organics—A Pilot Demo.", *Proceedings of the Nat'l Water Well Assn/Amer. Pet. Inst. Conf.,* pp. 555–564 (1985).
Dickinson, et al., "Radial Wells and Hazardous Waste Sites," *RCRA Site Remediation,* 232–237 (no date).
Gudemann, et al., "In Situ Remediation of VOC Contaminated Soil and Groundwater by Vapor Extraction and Groundwater Aeration," *Haztec International* '88, Conference Proceedings, pp. 2A–90 through 2A–111 (1988).
Marley, "Air Sparging in Conjunction with Vapor Extraction for Source Removal at VOC Spill Cites", *5th Nat'l Outdoor Action Conf.,* Nat'l Water Well Assn., pp. 89–101 (1991).
Regalbuto, et al., "In Situ Removal of VOC's by Means of Enhanced Volatilization," *Proc. Petrol. Hydrocarbons and Organic Chem. in Ground Water,* Assn. of Ground Water Sci., pp. 571–590 (1988).
Rogoshewski, et al., "Remedial Action Technology for Waste Disposal Sites," Noyes Data Corporation, pp. 258–269 (1983).
Yaniga, et al., "Restoration of Water Quality in a Multiaquifer System Via In Situ Biodegradation of the Organic Contaminants," *5th Nat'l Symp.,* Nat'l Water Well Assn., pp. 510–526 (1985).
Periodical: "Air Sparging Improves Effectiveness of Soil Vapor Extraction System," *The Hazardous Waste Consultant,* vol. 9, Issue 2, pp. 1.1–1.4 (Mar./Apr. 1991).
Absalon, J. R., et al., "Treatment Alternatives Evaluation for Aquifer Restoration," 1983.
Barker, J. F., et al., "Attenuation by Biotransformation of Gasoline Derived Hydrocarbons in Permeable Sand Aquifers".
Brown, R. A., et al., "Oxygen Transport in Contaminated Aquifers with Hydrogen Peroxide,"National Well Water Assoc., Nov. 1984.
Kaback, Dawn, et al., "Horizontal Wells for In–Situ Remediation of Groundwater and Soils," National Water Well Association, May 1989.
Marley, Michael, et al., "Induced Soil Venting for Recovery/Restoration of Gasoline Hydrocarbons in the Vadose Zone," (master's thesis).
Ryan, John R., et al, "Bioremediation of Organic Contaminated Soil," Feb. 1991.
Swallow, June A., et al., "Volatilization of Organic Compounds from Unconfined Aquifers,"May 1983.
Wilson, David J., "Soil Cean Up by in–situ Aeration," Marcel Dekker, Inc., 1988.
Yaniga, Paul, M. et al., "Restoration of Water Quality in Multiaquifer System via Insitu Biodegradation of the Organic Contaminants", May 1991.
"Review of Six Technologies for in situ Bioremediation of Dissolved Btex in Groundwater," Mar. 1992.
"Soils Impacted by Motor Fuels: A Literature Review," American Petroleum Institute, Jun. 1987.
Conference on Petroleum Hydrocarbons and Organic Chemicals in Ground Water—Prevention, Detection and Restoration, National Water Well Assoc., Nov. 1985.
Conference on Petroleum Hydrocarbons and Organic Chemicals in Ground Water—Prevention, Detection and Restoration, National Water Well Assoc., Nov. 1986.
Conference on Petroleum Hydrocarbons and Organic Chemicals in Ground Water—Prevention, Detection and Restoration, National Water Well Assoc., Nov. 1987.
Conference on Petroleum Hydrocarbons and Organic Chemicals in Ground Water: Prevention, Detection and Restoration, Nov. 1988.

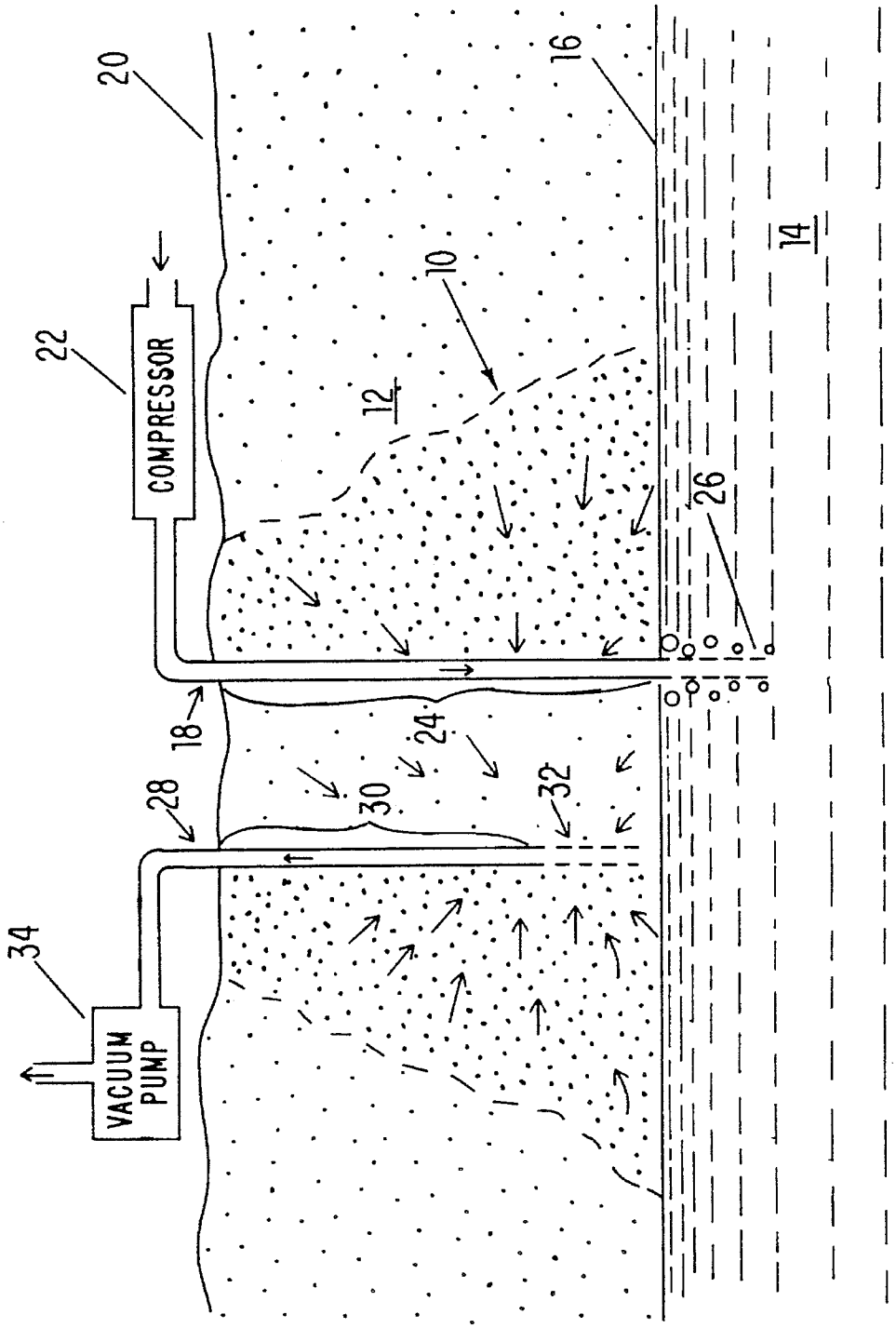

FIG-1

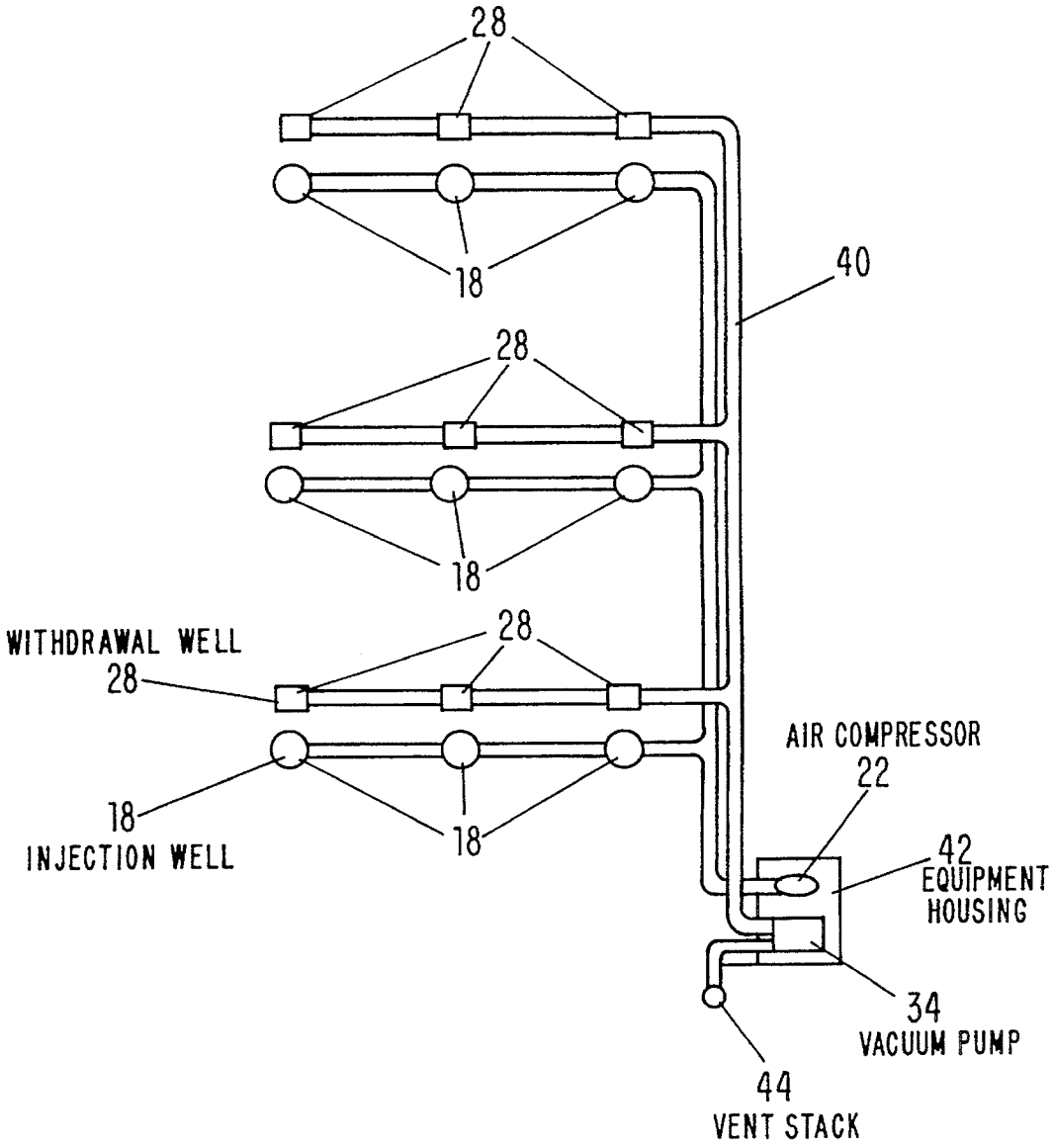
28
18
40
28
18
WITHDRAWAL WELL
28
28
18
INJECTION WELL
18
AIR COMPRESSOR
22
42
EQUIPMENT
HOUSING
34
VACUUM PUMP
44
VENT STACK

FIG—2

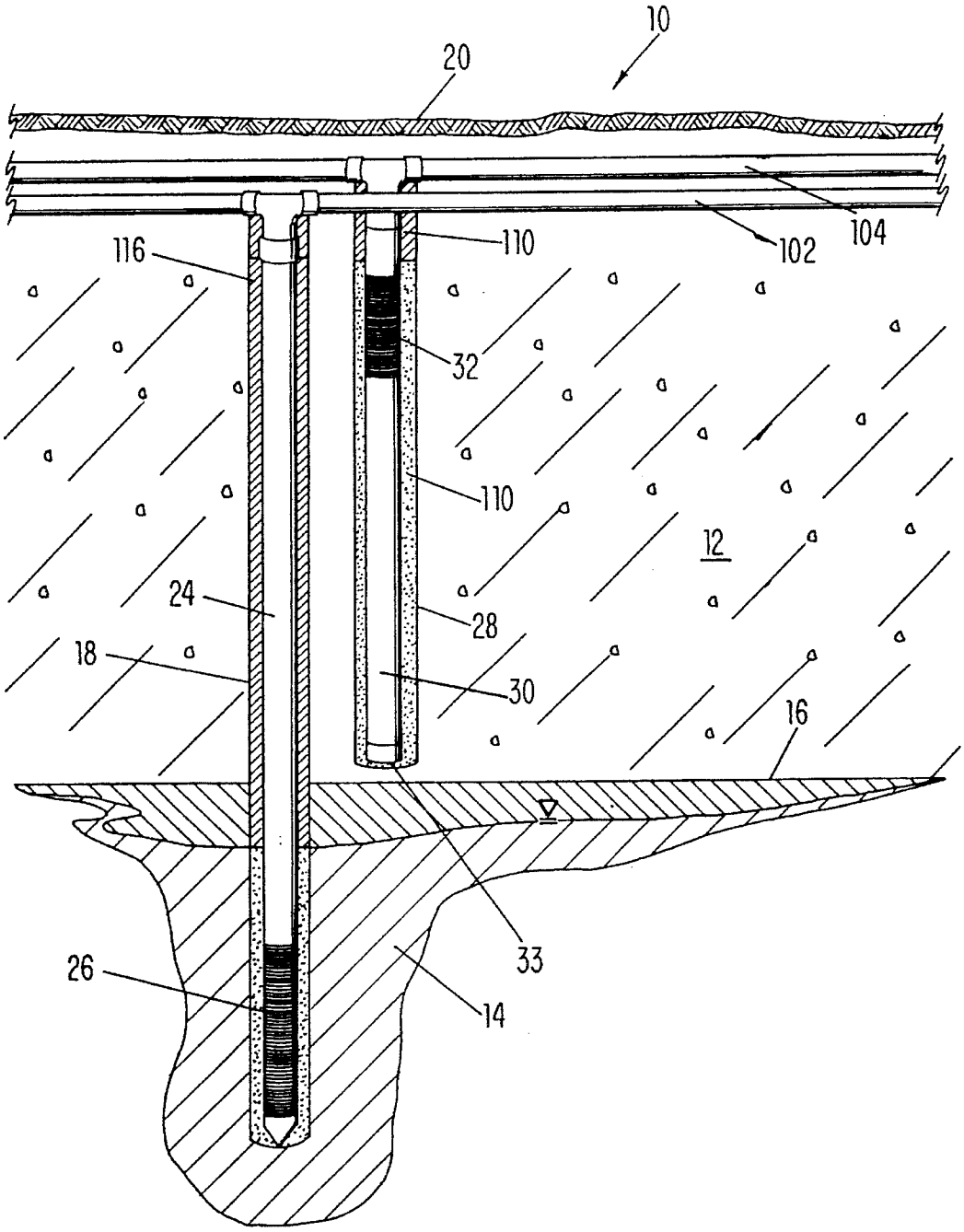

FIG-3

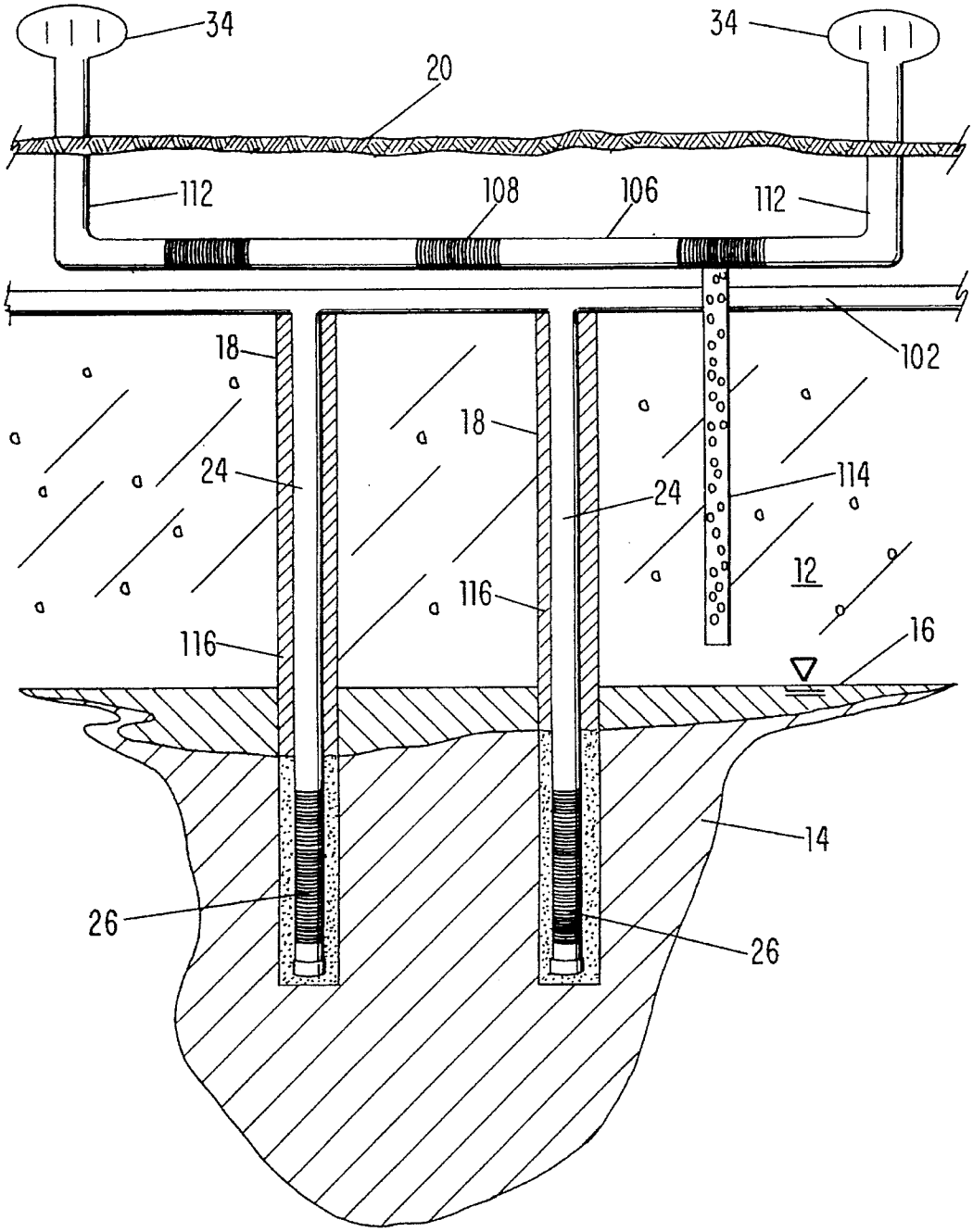

FIG – 4

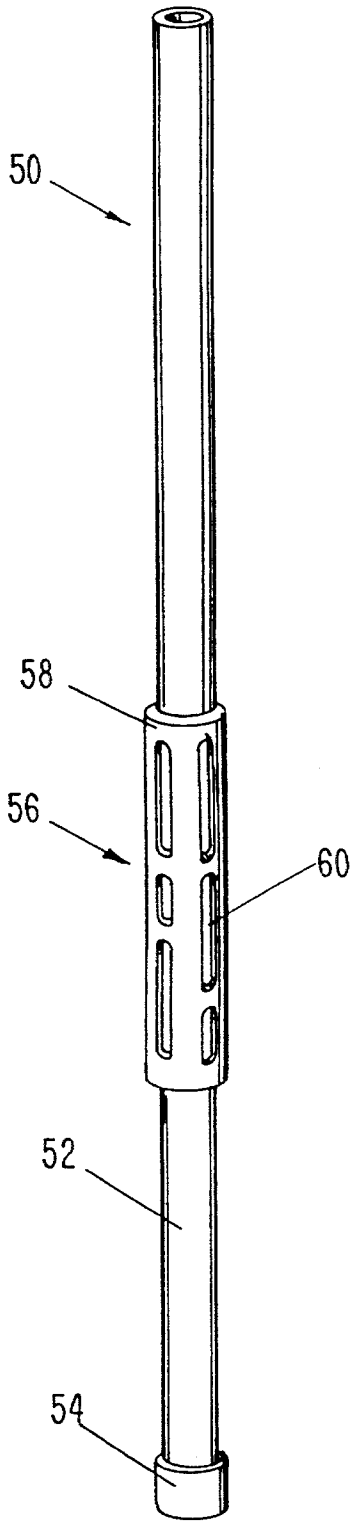

FIG-5

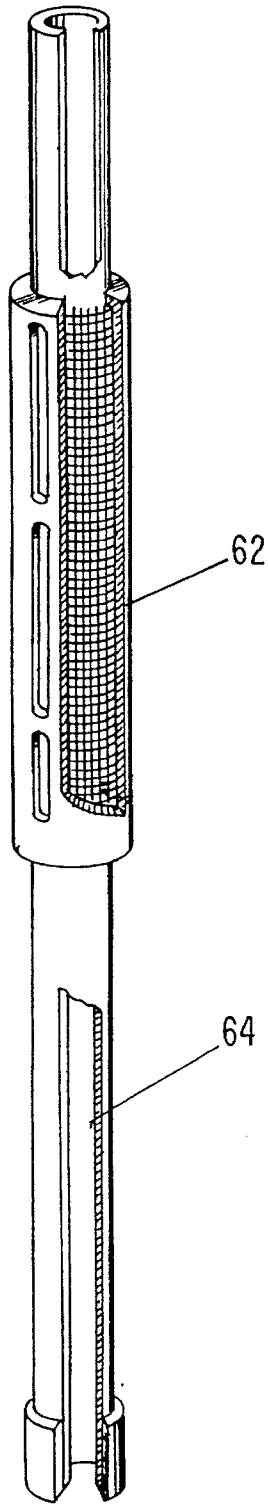

FIG-6

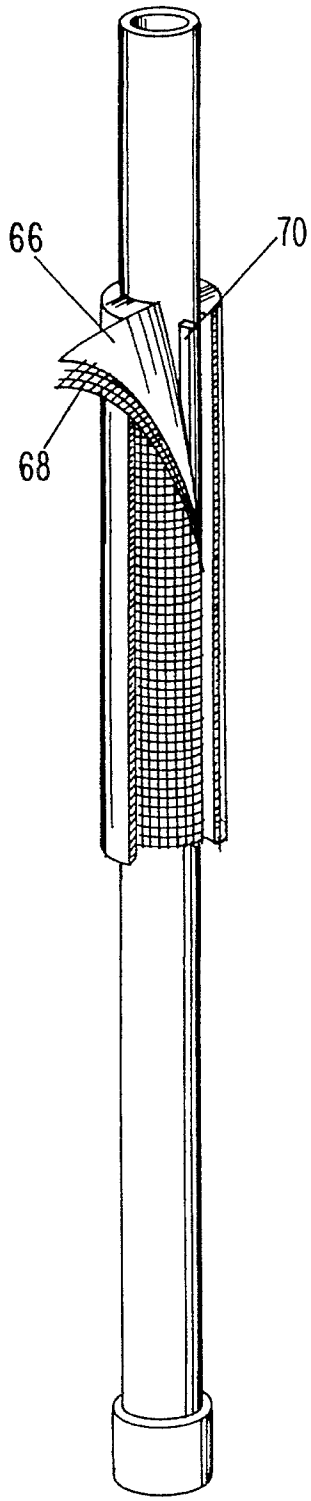

FIG-7

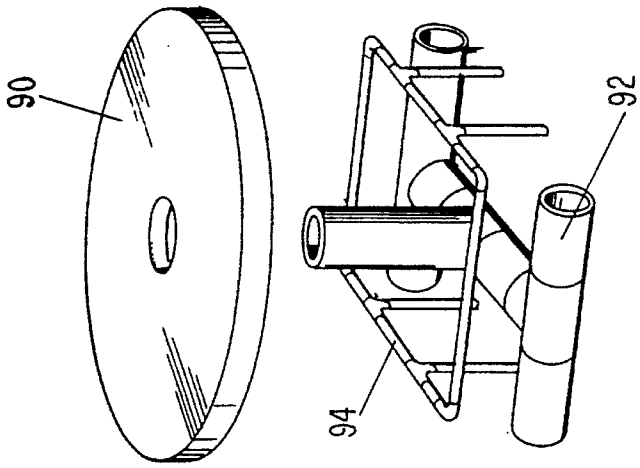

FIG-10

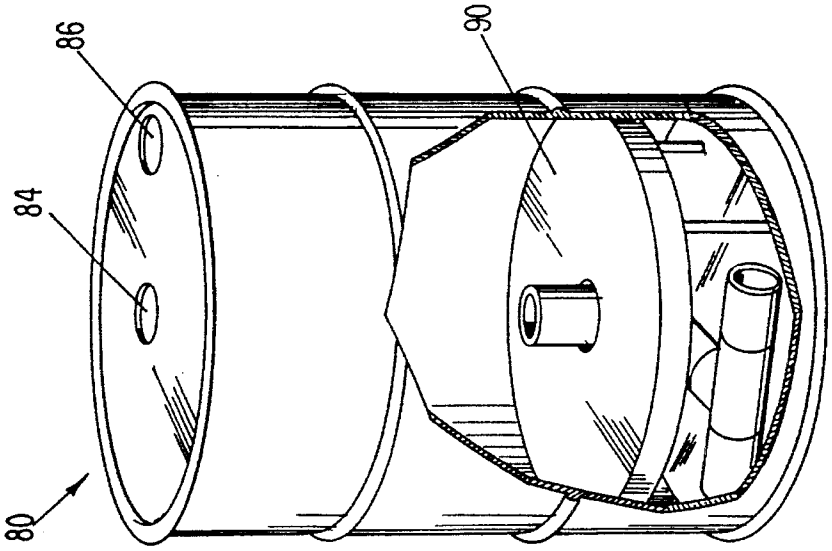

FIG-9

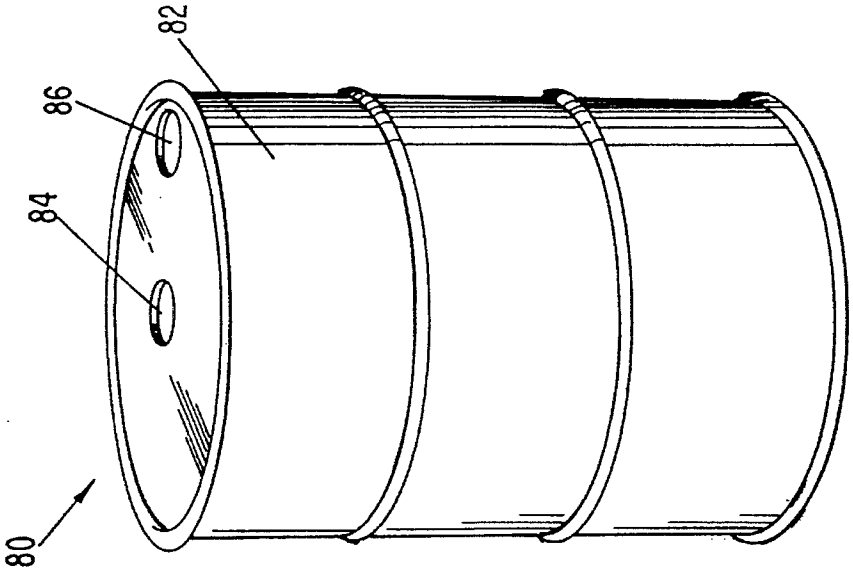

FIG-8

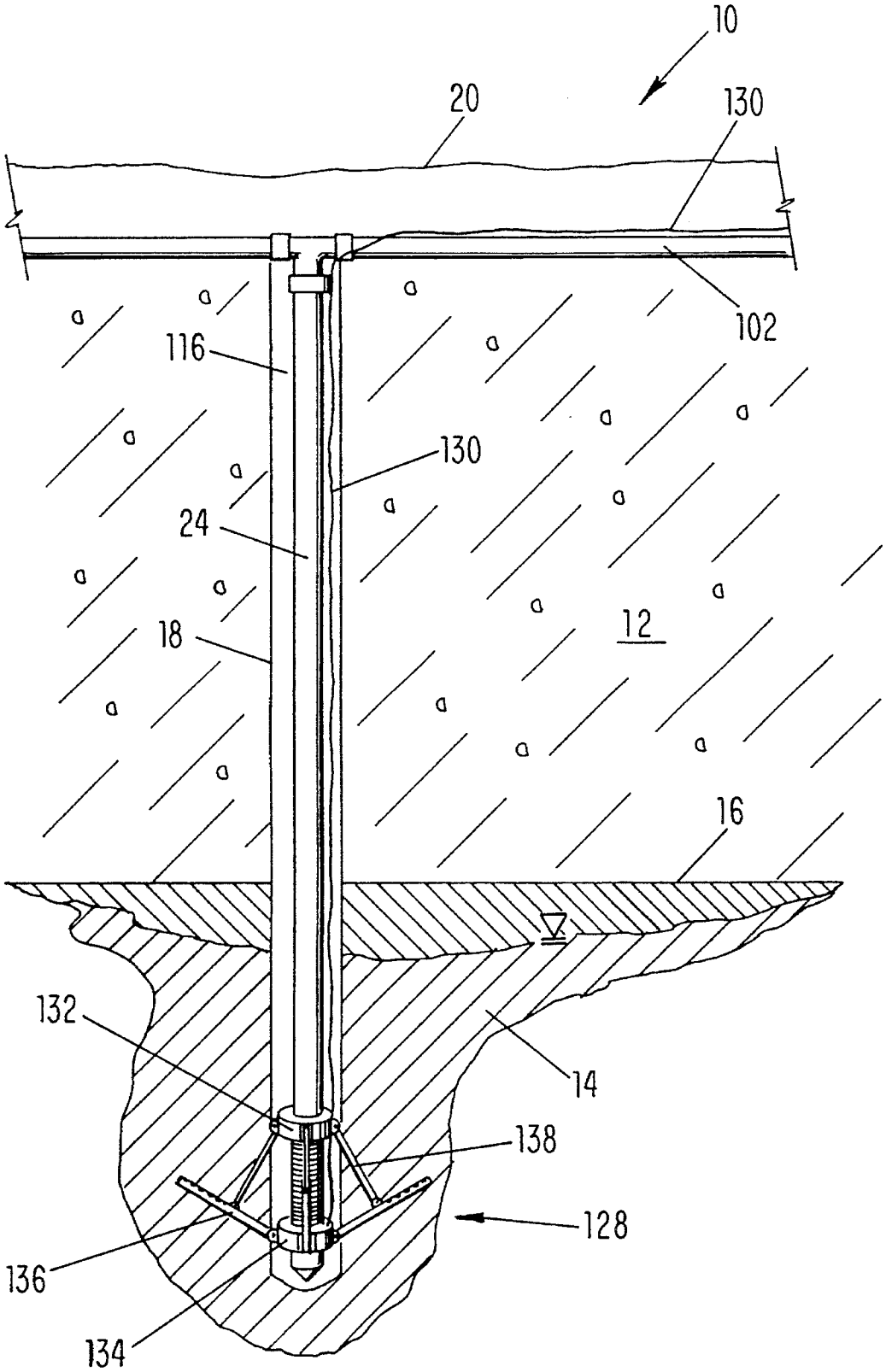

FIG-11

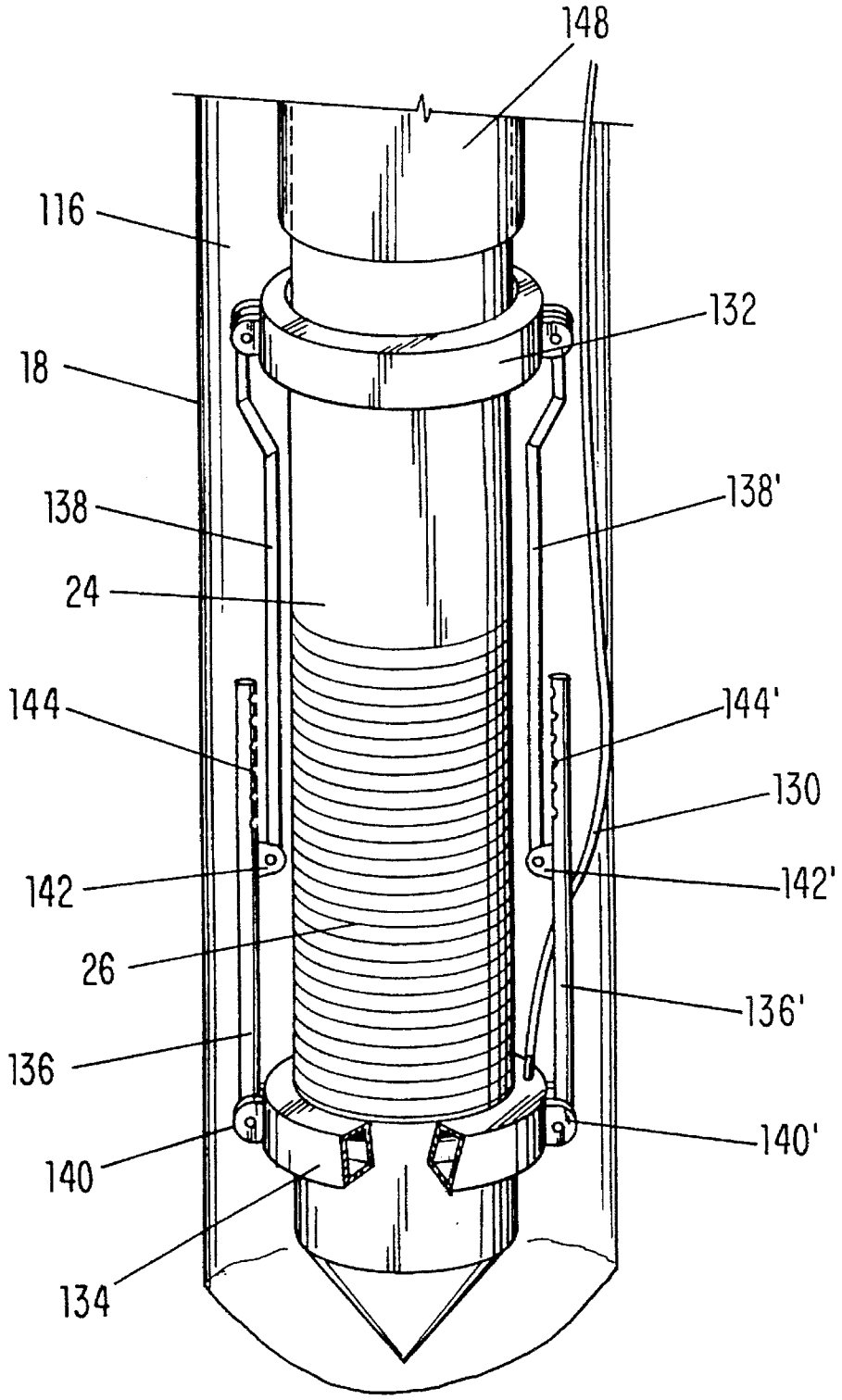
148
116
132
18
138
138'
24
144
144'
130
142
142'
26
136'
136
140'
140
134

FIG-12

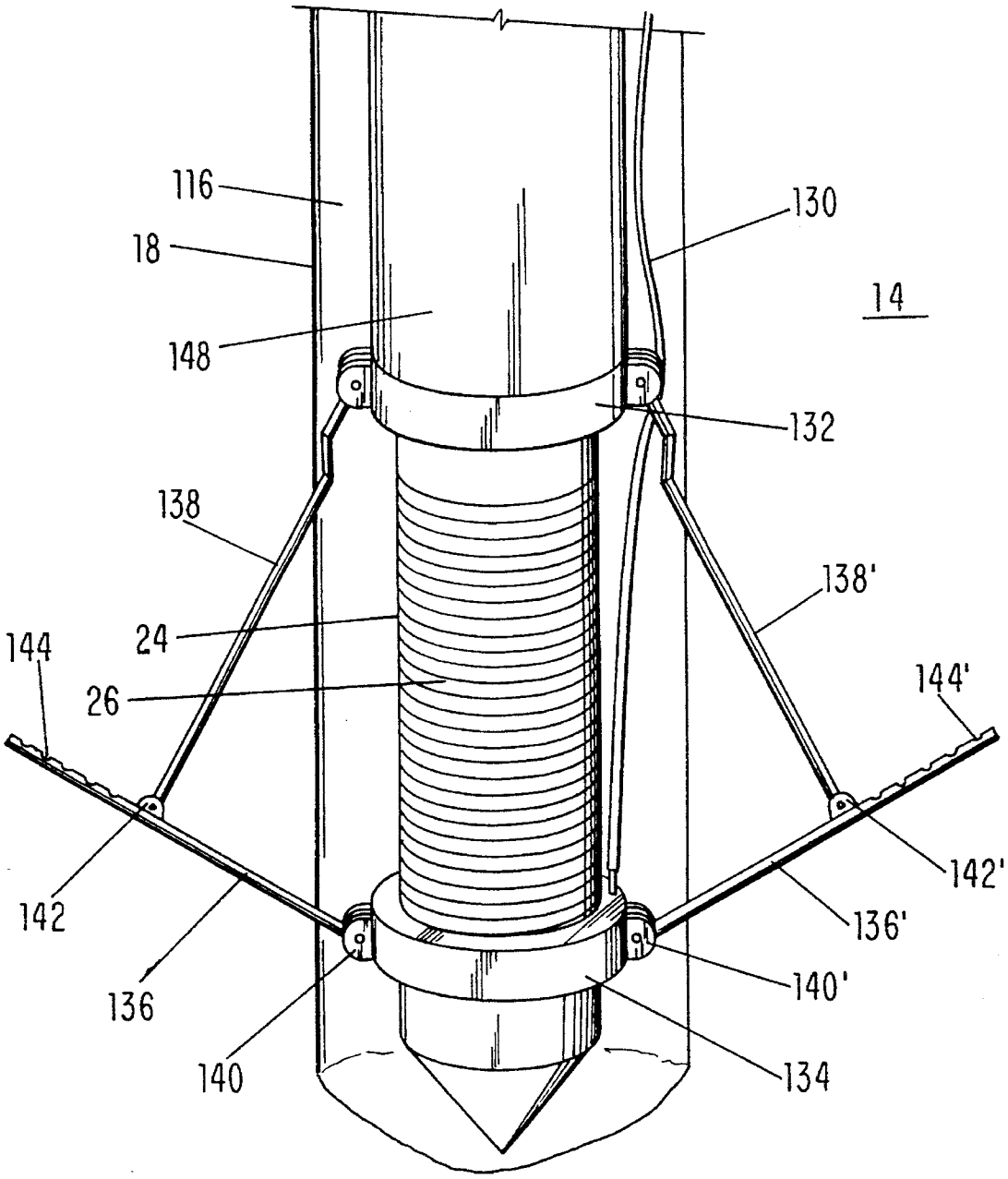
116
18
148
130
14
132
138
138'
24
144
26
144'
142
142'
136
136'
140
140'
134

FIG – 13

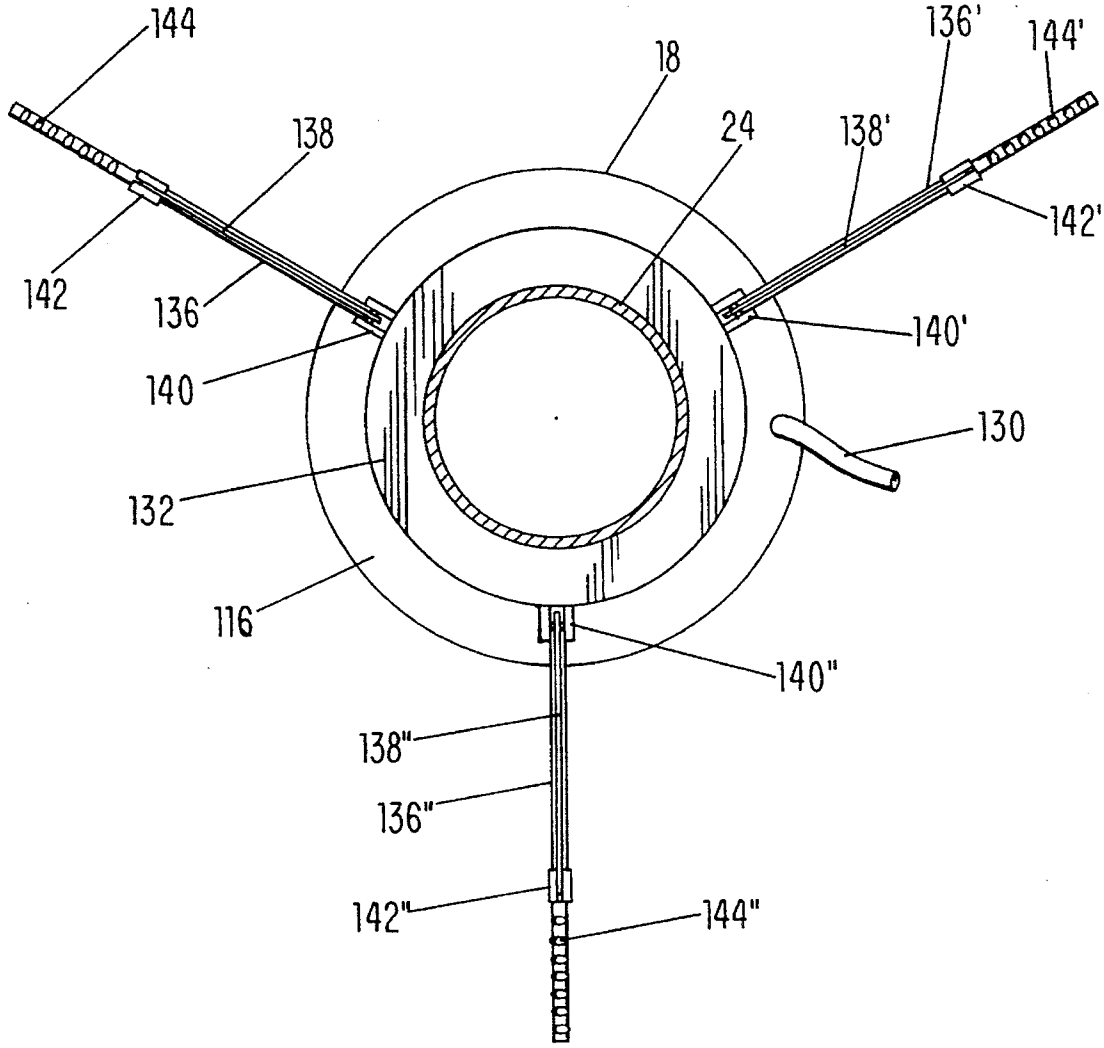
144
138
142
136
140
132
116
18
24
136'
144'
138'
142'
140'
130
140"
138"
136"
142"
144"

FIG-14

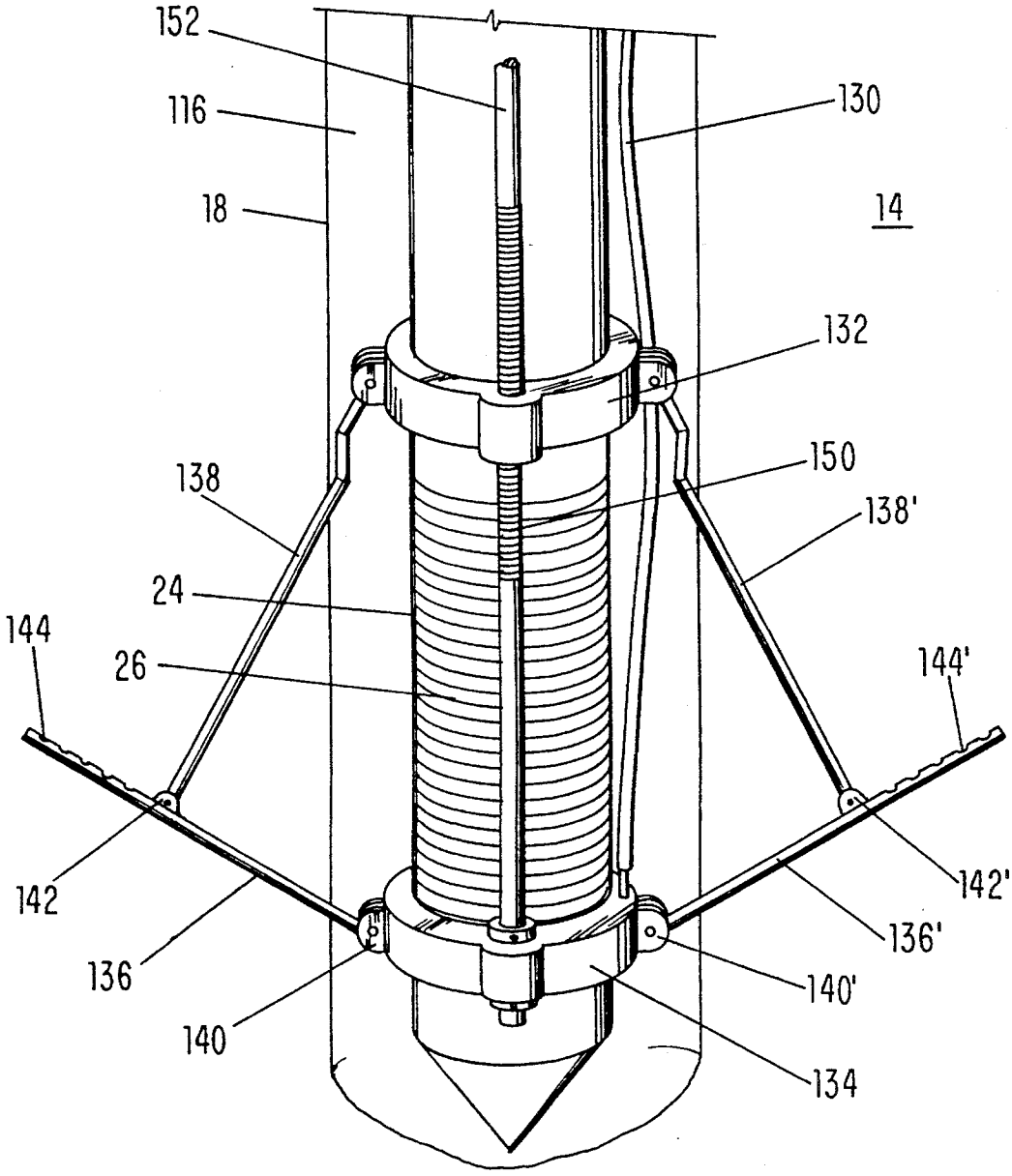
152
116
18
130
14
132
150
138
138'
24
144
26
144'
142
142'
136
136'
140
140'
134

FIG-15

CONTAMINANT REMEDIATION, BIODEGRADATION AND VOLATILIZATION METHODS AND APPARATUSES

CROSS-REFERENCE TO RELATED APPLICATIONS

This application is a continuation-in-part application of U.S. patent application Ser. No. 07/800,545 to Jeffery F. Billings and Gale K. Billings, filed on Nov. 27, 1991 (issued as U.S. Pat. No. 5,277,518), entitled Contaminant Remediation, Biodegradation and Removal Methods and Apparatuses, which is a continuation-in-part application of U.S. patent application Ser. No. 07/712,919, entitled Subsurface Remediation, Biodegradation and Extraction Methods and Apparatuses, to Jeffery F. Billings and Gale K. Billings, filed on Jun. 7, 1991, now U.S. Pat. No. 5,221,159, which is a continuation-in-part application of U.S. patent application Ser. No. 07/500,767, entitled Subsurface Volatilization Method and System, to Jeffery F. Billings, filed on Mar. 28, 1990, now abandoned, the teachings all of which are incorporated herein by reference.

BACKGROUND OF THE INVENTION

1. Field of the Invention (Technical Field)

The present invention relates generally to methods and apparatuses for in situ remediation of organic contaminants, such as hydrocarbons, and inorganic contaminants, such as metals, from subsurface soil and ground water. In situ remediation of excavated materials and surface spills of liquid contaminants also may be conducted utilizing the present invention.

2. Background Art

The background of the present inventions is discussed in depth in U.S. patent application Ser. No. 07/712,919, entitled Subsurface Remediation, Biodegradation and Extraction Methods and Apparatuses, to Jeffery F. Billings and Gale K. Billings, filed on Jun. 7, 1991, and in U.S. patent application Ser. No. 07/500,767, entitled Subsurface Volatilization Method and System, to Jeffery F. Billings, filed on Mar. 28, 1990, now abandoned, the teachings of both of which are incorporated herein by reference.

The vacuum extraction inventions disclosed in the above two applications (and all known vacuum extraction systems) have, due to the use of extraction wells having perforations near the bottom thereof, encountered problems with the upwelling or condensation of contaminated subsurface water into the extraction wells, and concomitant fouling of the extraction wells and pumps, thus necessitating expensive surface water treatment equipment. The present invention solves this problem in a number of ways, while enhancing remediation.

Additionally, as disclosed herein, the liquid contaminant extraction apparatus and method of U.S. patent application Ser. No. 07/712,919 may be employed to remove contaminants from surface waters, such as lakes, rivers, seas, and oceans.

Furthermore, as disclosed herein, the volatilization inventions employing injection wells disclosed in U.S. applications Ser. Nos. 07/712,919 and 07/500,767 may be used with or without extraction wells.

SUMMARY OF THE INVENTION

(DISCLOSURE OF THE INVENTION)

The present invention comprises in situ methods and apparatuses for removal of contaminants from soil or from

ground water, or both.

The first method and apparatus comprises establishing in situ at least one venting well having gas-permeable openings at an upper portion thereof, whereby volatile contaminants in the ground water or soil are removed through the venting well. In the preferred embodiment, at least one injection well is established in situ and an oxygen-containing substance, such as a gas or fluid, is injected into the injection well. Optionally, a vacuum is applied to the venting well. Preferably, the venting well and the injection well are within two hundred feet of one another and make up a well nest. The injection well, depending on site stratigraphy, is preferably within ten feet of the venting well and may be adjacent the venting well within a same bore hole. Preferably, the oxygen-containing gas is heated by solar heating, the venting well comprises a condensate drain at a lower end thereof, and microorganisms and nutrients, food, or both, are provided to a subsurface contaminated zone. The invention may additionally comprise sampling soil or water, isolating at least one microorganism useful in biodegrading the contaminants, fermenting the isolated microorganisms to increase their population, and inserting the fermented microorganisms into the subsurface. The invention may also comprise providing an elongated tube reservoir capped at one end (preferably to the bore hole of a venting well, an injection well, or both), providing entry ports in the elongated tube reservoir, surrounding the entry ports with filtration means, and collecting contaminants in the elongated tube reservoir by passage thereof through the filtration means. The invention may further comprise impregnating water with microorganisms useful in biodegradation of the contaminant, confining the impregnated water to one or more containers, and bubbling contaminants from the venting well through the impregnated water within the containers. Preferably, the venting well additionally comprises gas-permeable but low capillary-lift fill material below the gas-permeable openings in the venting well.

The second method and apparatus of the invention comprises: establishing in situ a venting lateral comprising gas-permeable openings therein; establishing in situ a plurality of injection wells; and injecting oxygen-containing gas or other substance into the injection wells; whereby volatile contaminants in the ground water or soil are removed through the venting lateral. Optionally, a vacuum is applied to the venting lateral. Preferably, the venting lateral and the injection well are within two hundred feet of one another and make up a well nest, the oxygen-containing gas or other substance is heated by solar heating, and microorganisms and nutrients, food, or both, are provided to the subsurface. The invention may additionally comprise sampling soil or water, isolating at least one microorganism useful in biodegrading the contaminants, fermenting the isolated microorganisms to increase their population, and inserting the fermented microorganisms into the subsurface. The invention may also comprise providing an elongated tube reservoir capped at one end (preferably to an injection well), providing entry ports in the elongated tube reservoir, surrounding the entry ports with filtration means, and collecting contaminants in the elongated tube reservoir by passage thereof through the filtration means. The invention may further comprise impregnating water with microorganisms useful in biodegradation of the contaminant, confining the impregnated water to one or more containers, and bubbling contaminants from the venting well through the impregnated water within the containers. Preferably, the venting well additionally comprises one or more vertical vents beneath the gas-permeable openings of the venting lateral. The

vertical vent may be a gas-permeable chimney of sand or a venting well having gas-permeable openings therein and, optionally, being fluidly connected to the venting lateral, or a combination of the two types (a venting well extending partially down a sand chimney).

The third method and apparatus of the invention comprises: establishing in situ a venting lateral comprising gas-permeable openings therein; and placing a vertical vent beneath the venting lateral; whereby volatile contaminants in the ground water or soil are removed through the venting lateral. In the preferred embodiment, at least one injection well is established in situ and oxygen-containing substance, such as a gas, is injected into the injection well. Optionally, a vacuum is applied to the venting lateral. Preferably, the venting lateral and the injection well are within two hundred feet of one another and make up a well nest, the oxygen-containing gas is heated by solar heating, and microorganisms and nutrients, food, or both, are provided to the subsurface. The invention may additionally comprise sampling soil or water, isolating at least one microorganism useful in biodegrading the contaminants, fermenting the isolated microorganisms to increase their population, and inserting the fermented microorganisms into the subsurface. The invention may also comprise providing an elongated tube reservoir capped at one end (preferably to an injection well), providing entry ports in the elongated tube reservoir, surrounding the entry ports with filtration means, and collecting contaminants in the elongated tube reservoir by passage thereof through the filtration means. The invention may further comprise impregnating water with microorganisms useful in biodegradation of the contaminant, confining the impregnated water to one or more containers, and bubbling contaminants from the venting well through the impregnated water within the containers. Preferably, the vertical vent is beneath the gas-permeable opening of the venting lateral. The vertical vent may be a gas-permeable chimney of sand or a venting well having gas-permeable openings therein and, optionally, being fluidly connected to the venting lateral, or a combination of the two types (a venting well extending partially down a sand chimney).

The fourth method and apparatus of the invention comprises: establishing in situ at least one injection well into the ground water; injecting oxygen-containing substance, such as a gas, into the injection well to volatilize and biodegrade contaminants in the ground water and soil; and permitting upward migration of the volatilized and biodegraded contaminants without one or more venting conduits. In other words, no venting wells, venting laterals, or equivalent equipment is used. Preferably, the oxygen-containing gas is heated by solar heating and microorganisms and nutrients, food, or both, are provided to the subsurface. The invention may additionally comprise sampling water or soil, isolating at least one microorganism useful in biodegrading the contaminants, fermenting the isolated microorganisms to increase their population, and inserting the fermented microorganisms into the subsurface. The invention may also comprise providing an elongated tube reservoir capped at one end (preferably to an injection well), providing entry ports in the elongated tube reservoir, surrounding the entry ports with filtration means, and collecting contaminants in the elongated tube reservoir by passage thereof through the filtration means.

The invention optionally may comprise the use of an expander apparatus which permits lateral injection of substances radially outward from the well bore. One or more hollow radial injection tubes may be connected to a source of injected substances, placed down-well in a vertical disposition, and then pivoted through a vertical angle radially outward from the well. The pivoting of the radial injection tubes gives them a variable degree of horizontal disposition, so that substances may be forced through them radially outward from the well to enhance injection efficiency.

In all embodiments, the rate of biodegradation is controllable by varying the oxygen available to the biodegrading organisms. By deliberately manipulating the available oxygen, the user is able to increase or suppress the rate of bio-organism reproduction and metabolism, with a corresponding effect upon the rate of biodegradation of contaminants.

Accordingly, a primary object and purpose of the present invention is to provide an improved method and associated system for removing contaminants which does not suffer from the deleterious effects of upwelling and condensation of contaminated liquid water.

Another object of the present invention is to remove contaminants from a subsurface aquifer and from surface water, the contaminants being removed in relatively pure form.

An additional object of the present invention is to provide a method and system of removal of contaminants from subsurface soil as well as from ground water.

Another object and purpose of the present invention is to provide a relatively inexpensive method and system for in situ removal of contaminants from subsurface ground water and soil, as well as from surface waters.

A primary advantage of the present invention is that it is relatively inexpensive, efficient, and quick because of the combination of technologies employed.

An additional advantage of the present invention is that it integrates simultaneous remediation of free-product, soil residual, vapors, and contaminated ground water. If the invention is operated in the subsurface, these processes take place in: (a) the vadose zone; (b) the capillary fringe zone between the vadose zone and the water table; (c) at the water table; and (d) below the water table, synchronously. It does so by synchronous attack upon each of the physical and chemical characteristics of the four types of contamination. The invention is also operable above ground, for example, on excavated materials.

Yet another advantage of the present invention is that contaminated air may either be vented or treated before venting.

An additional advantage of the present invention is that liquid hydrocarbon contaminant may be removed from contaminated water such that the hydrocarbon contaminant is pure enough to be refined rather than handled as a toxic waste.

Other objects, advantages, and novel features, and further scope of applicability of the present invention will be set forth in part in the detailed description to follow, taken in conjunction with the accompanying drawings, and in part will become apparent to those skilled in the art upon examination of the following, or may be learned by practice of the invention. The objects and advantages of the invention may be realized and attained by means of the instrumentalities and combinations particularly pointed out in the appended claims.

BRIEF DESCRIPTION OF THE DRAWINGS

The accompanying drawings, which are incorporated into and form a part of the specification, illustrate several

embodiments of the present invention and, together with the description, serve to explain the principles of the invention. The drawings are only for the purpose of illustrating a preferred embodiment of the invention and are not to be construed as limiting the invention.

FIG. **1** is a schematic illustration in cross-section of a subterranean soil formation having a water table, and wherein the method and system of the present invention are being applied;

FIG. **2** is a plan view of an array of wells connected to a single compressor/vacuum pump station;

FIG. **3** is a schematic illustration in cross-section of a subterranean soil formation having a water table, wherein the preferred method and system of the present invention are being applied;

FIG. **4** is a schematic illustration in cross-section of a subterranean soil formation having a water table, and wherein an alternative method and system of the present invention are being applied;

FIG. **5** is an exterior view of the free-product extraction apparatus of the invention;

FIG. **6** is an interior exposed view of the free-product extraction apparatus;

FIG. **7** is a further interior exposed view of the free-product extraction apparatus;

FIG. **8** is an exterior view of the biotreater apparatus of the invention;

FIG. **9** is an interior exposed view of the biotreater apparatus;

FIG. **10** is an illustration of interbasal components of the biotreater apparatus;

FIG. **11** is an illustration of a portion of the FIG. **3** embodiment, showing the optional injection radius extension elements of the invention; FIG. **12** is an enlarged view of a portion of the FIG. **11** embodiment, showing the injection radius extension elements in a collapsed position; and FIG. **13** is an additional view of the FIG. **12** embodiment, showing the injection radius extension elements in an extended position;

FIG. **14** is a top view of the embodiment of FIG. **13**; and

FIG. **15** illustrates an alternative embodiment of the embodiment of FIG. **13**.

DESCRIPTION OF THE PREFERRED EMBODIMENTS

BEST MODES FOR CARRYING OUT THE INVENTION)

The present invention relates to methods and apparatuses for remediating, biodegrading, and extracting organic and inorganic contaminants.

The air-injection methods and apparatuses of the present invention are preferably employed to remove contaminants from subsurface soil and ground water by physical, chemical, and biological means, in situ. However, the same methods and apparatuses may be employed in man-made landfills, with excavated soils, to directly treat industrial wastes, and the like. The air-injection/air-venting systems of the invention may be combined with bio-treatment of contaminated gases prior to venting, extraction of contaminants from water, injection of contaminant-consuming microbes into the contaminants, and growth stimulation of natural or injected microbes by subsurface injection of nutrients (predominantly inorganic compounds), food (predominantly organic compounds), or both.

The liquid contaminant extraction method and apparatus of the invention is preferably used to remove free liquid contaminants from subsurface water. However, the invention may also be used to remove liquid contaminants from surface waters. For example, the invention may be used to assist in remediation of hydrocarbon spills (e.g., from an oil tanker spill) so as to recover contaminants which are thereafter relatively pure and therefore commercially useful.

Referring to FIGS. **1** and **3**, the preferred embodiment of the present air-injection invention is illustrated therein as directed to the remediation of a contaminated site **10**, wherein there is a vadose zone **12** overlying a ground water reservoir or aquifer **14**. The contamination will be present in the ground water reservoir or aquifer **14** and in the vadose zone **12**. The upper boundary of the aquifer **14** is defined by the level of the water table **16**. It will be recognized that there may be a capillary zone (not shown separately) above the water table **16**, in which water is drawn upwardly into the vadose zone **12** by capillary action, and the term "vadose zone" is intended to cover this capillary zone. In general, the capillary zone will be contaminated if the ground water itself is contaminated.

In the preferred embodiment, a plurality of injection wells **18** extend from the ground surface **20** to a level beneath the water table **16** into the aquifer **14**. The injection wells **18** are connected to an air compressor **22** via manifold **102**. The air compressor **22** preferably has a capacity of at least approximately 10 to 300 cubic feet per minute (cfm) at 1 to 100 pounds per square inch (psi). Air or other oxygen-containing gas or fluid is introduced into the injection well **18** via the air compressor **22**. The term "air," as used throughout the specification, is intended to include oxygen-containing gases.

Other oxygen-containing substances besides air or other oxygen-containing gases may alternatively be employed in the successful practicing of the invention. The bioremediation aspect of the invention includes the introduction of substances into the subsurface to augment the oxygen available for microbial metabolism. Oxygen-containing fluids, including liquids, may be used. Non-limiting examples of oxygen-containing fluids useable in the invention are liquid peroxides (e.g., hydrogen peroxide) and aqueous or other solutions of nitrate or sulfate compounds. Similarly, solid substances or mixtures of substances which contain biochemically available oxygen (perhaps after dissolution in water) may be introduced directly into an injection well **18**. For example, solids (generally powdered) such as NO_x and/or SO_x compounds (e.g., nitrates and sulfates), or various peroxides which are solid at standard conditions of temperature or pressure (e.g., calcium peroxide) may be introduced into injection wells **18** to augment available oxygen.

The injection wells **18** are preferably made of common materials such as polyvinyl chloride (PVC). Injection wells are completed and emplaced using common well methodology. The injection wells **18** preferably include a gas-impermeable well liner **24**, such as a PVC pipe, along the major part of its length. The injection well **18** extends to a depth of preferably one to 100 feet beneath the water table **16**. The depth of penetration below the water table **16** depends on the thickness or extent of the contaminated portion of the ground water aquifer **14**. Air, or other oxygen-containing substance, is introduced into the injection well **18** and exits the injection well **18** through a screen **26** or other

perforated material, of a common manufactured type, into the aquifer **14** at the chosen depth.

The end of the injection well **18** in the aquifer **14** contains openings, such as from a gravel-packed, 10–40 slot screen **26** or piping with holes or perforations. The screen **26** functions as a sparger to introduce pressurized air into the aquifer **14**, so as to stimulate circulation of the water and mixture of the air and water. Injection is accomplished at low to moderate air pressures.

Venting wells **28** are located in the vadose zone **12** within a predetermined distance from an injection well **18**. The relative distance in both the horizontal and vertical dimensions between injection wells **18** and venting wells **28** is critical to proper operation of the present system. These distances are chosen based on site characteristics. This "well nesting" is discussed in detail in the '919 application. There may be "nests" having a plurality of extraction wells for each injection well, a plurality of injection wells for each extraction well, or pairs of injection/extraction wells (from 200 feet apart to within the same boreholes). A venting well **28** includes a gas-impermeable pipe **30** along the major portion of its length, with a space between the pipe **30** and the well hole. The upper end of venting well **28** contains perforations or openings **32**, such as a sparger from a gravel packed, 10–40 slot aperture size well screen or piping with holes in it. The lower portion of venting well **28** comprises fill material **110** packed around pipe **30**. Fill material **110** is preferably relatively permeable to air and other gases yet having low-capillary lift properties. Preferably, fill material **110** is silica sand. Such fill material **110** permits air and contaminants to pass up venting well **28** and through screen **32** yet resists upwelling and condensation of contaminated, liquid, ground water, which are typically present in prior art venting wells perforated at the lower end, and prevents clogging of openings **32** and fouling of vacuum pumps **34**, where employed. Preferably, the lower portion of venting well **28** additionally comprises a condensate drain which releases condensate back into the vadose zone rather than accumulating condensate at the bottom of venting well **28**.

Venting wells **28** may be, but need not be, connected to a fan or vacuum pump **34** via manifold **104**. If employed, the fan or vacuum pump **34** is preferably of a capacity of 10 to 300 cfm. Injection of air via injection wells **18** volatilizes contaminants and forces these contaminants and contaminant-breakdown byproducts up and into venting wells **28**. If employed, the fan or vacuum pump **34** assists in drawing the volatile contaminants and byproducts into venting wells **28** in a controlled manner.

In an alternative embodiment of the invention, air injection wells **18**, in the absence of extraction wells, are utilized to volatilize contaminants and provoke biodegradation of contaminants. The volatilized contaminants rise to the surface and are vented to the atmosphere. Obviously, this embodiment should not be utilized when control of the vented gases is desired or required.

FIG. **4** illustrates another alternative embodiment of the method and system of the present invention. In this embodiment, injection wells **18** are constructed as in the preferred embodiment illustrated in FIGS. **1** and **3**. Venting laterals **106**, comprising gas-impermeable piping having screens or perforations **108** therein, permit ingress of air, contaminants, and biodegradation byproducts. Venting laterals **106** are beneath surface **20** far enough to prevent migration of surface water into laterals **106**. Such location eliminates the fouling of venting wells near the water table by subsurface water, and fouling of venting pumps by condensate, associated with previously existing vacuum extraction and venting systems. Venting laterals **106** additionally comprise conduits **112** leading to surface **20**. Optionally, venting fans or vacuum pumps **34** are fluidly connected to one or more conduits **112**.

As illustrated in FIG. **4**, the alternative method and system of the invention may optionally comprise venting chimneys **114** beneath one or more lateral screens **108**. Venting chimneys **114**, preferably shafts filled with silica sand (or other gas-permeable, low capillary-lift material), permit upward migration of air, contaminants, and by-products, but discourage upward migration of liquid water. Venting chimneys **114** may additionally comprise (not shown) PVC piping having one or more screens or openings therein; the vertical piping may connect to venting lateral **106** or may connect to a separate venting manifold. As is readily observable by those skilled in the art, venting laterals **106** may be employed without venting chimneys **114** or with any combination of silica sand shafts, vertical PVC piping, or other venting means known in the art, depending on site stratigraphy and other factors. For example, a silica sand venting chimney may have vertical piping extending only through an upper portion of the chimney.

The gas-impermeable piping **24** and **30** of the injection and venting wells **18** and **28** and of venting laterals **106** may consist of metal or plastic piping, such as one- to two-inch PVC piping. The annulus of all wells (opening between borehole and pipe) is preferably sealed above the screens (e.g., with a bentonite/cement mixture **116**) to prevent suction loss and migration of surface water and free contaminants to the subsurface.

Where a liquid contaminant is known to be present as free-product within the ground water **14** (or in the soil above the water table), the following method of separation and extraction is employed. FIG. **5** illustrates the preferred method and apparatus for free-product extraction. A free-product extractor **50** is inserted in an extended venting well **28**. The extractor **50** comprises a hollow reservoir **52**, end cap **54**, and an entry cartridge **56**. The entry cartridge **56** comprises a protector **58**, outer ports **60**, and a filtration screen **62**. The filtration screen **62** comprises an outer layer **68** and a hydrophobic filter **66**. The entry cartridge **56** covers inner ports **70** permitting passage of fluid contaminants to the hollow interior **64** of the reservoir **52**. Free product extractor may be used in situ or in various configurations for surface, laboratory, or industrial use.

Non-dissolved liquid contaminant is separated from ground water **14** (or extracted from soil above the water table) by placing entry cartridge **56** in contact with the contaminant/water mixture (or contaminant/soil mixture) found at the bottom of an extended venting well **28**. Alternatively, free-product extraction apparatuses **50** may be placed in bore holes of insertion wells **18**, or a combination of insertion wells **18** and venting wells **28**, or in entirely separate bore holes. The contaminant/water mixture contacts filtration screen **62** through outer ports **60**. Subsurface fluid pressures force liquid contaminant through filtration screen **62** into the interior **64**. However, water does not enter interior **64** because it cannot pass through hydrophobic filter **66**. Subsurface fluid pressures, and not pumping pressures, force fluid contaminant to gradually fill reservoir **52**. The reservoir **52** then is pumped and allowed to refill before further pumping. This under-pumping allows the well to retain maximum efficiency.

According to the invention, the following method is employed to extract, analyze, ferment, and reintroduce

microorganisms useful in biodegradation of contaminants. Water or soil samples (or both) are taken from several contaminated zones (and, at times, from non-contaminated zones) within the site, because microbes are not uniformly distributed within a site. The samples are examined to determine the genera of microbes present and their concentrations. Microbes known or demonstrated to be useful in biodegrading the contaminant at the site are isolated and fermented to increase population. The site is then inoculated with the heightened population either through the point of contamination or through one or more injection wells **18** or venting wells **28** (or separate wells).

As the concentration of contaminant decreases, the concentration of contaminant degrading microbes must also decrease. If the rate of the microbial decrease is sufficient that it becomes apparent that the site will not reach statutory or desired limits in a rapid fashion, the preferred embodiment employs the following growth-stimulation method. Using this approach, food supplies (generally organic) or nutrients (generally inorganic) are inserted into the site using the same physical distribution of wells as is used for other aspects of this integrated remediation system. This results in a very cost effective enhancement of the rate of bioremediation without requiring any additional physical apparatus. This process takes place primarily in injection wells **18**. However, if the vadose zone **12** is exceptionally dry, humidity enhancement and nutrient/food enhancement take place in the venting wells **28**.

The outlets of venting wells **28** or venting laterals **106** may be connected to suitable stacks, vents, scrubbers, condensers, chemical filters and/or scavengers (not shown), to collect, dilute or vent contaminants extracted from the soil and ground water. The preferred embodiment of the biotreater uses flow rates in the air injection system which allow maximum bioremediation of the vapors so that air quality standards are not exceeded by the fluids vented by the remediation unit. However, some site conditions are such that one must vent at a heavier or faster rate, thus potentially exceeding air quality standards. Normally the present invention is operated in such a fashion that post-treatment of extracted gases is not necessary. However, the present invention provides a post-treatment method which, if necessary on the site, is very cost-effective and requires no electrical power. An example of other useful filters are activated carbon filters, prior art biotreaters, treatment by incineration, catalytic oxidation, or ultraviolet rays. These latter techniques are considerably more expensive than is the present invention.

The preferred biotreater **80** illustrated in FIGS. **8** through **10** is employed at the outlets of venting wells **28** or venting laterals **106**. An air conductive pathway (not shown) is established between an outlet and diffuser **92**, passing through inlet **84** into container **82**, preferably a 55-gallon drum. The biotreater **80** is filled (preferably partially filled) with water impregnated with microbes determined to have a degrading effect on the contaminant being extracted. When the vacuum pump **34** is in operation, contaminated air passes into biotreater **80**, bubbles up through the micro-impregnated water from diffuser **92**, past baffle **90** supported by stand **94**, and out through biotreater outlet **86**.

A plurality of biotreaters **80** may be connected in series to more efficiently decontaminate the air extracted by venting wells **28** or venting laterals **106**. Biotreaters may be added or deleted from the series as contaminant concentration from the vacuum pump **34** increases or decreases. Preferably, the microorganisms placed within the biotreaters are fermented from subsurface samples, and hence are identical to the microorganisms reintroduced to the subsurface at heightened concentration.

When injection occurs via an injection well whose elements, such as liner **24** and screen **26**, are confined entirely within the well bore **18**, the dispersion into the aquifer **14** of injected substances is somewhat inhibited by the highly localized, almost "point source" character of the mode of injection. Such a situation is depicted in FIG. **3**. Injected substances, particularly gases, tend to disperse or flow upward and outward from the bottom of the well, thus forming a zone of injection flow shaped generally like an inverted cone (with the bottom of the well **18** at the cone's apex). It may be desirable, therefore, to implement a means for increasing the volume of aquifer **14** within the injection flow zone, particularly to include portions of the aquifer very near the deepest part of the well.

Attention accordingly is invited to FIGS. **11–14**, illustrating an alternative embodiment of the invention useful for enhancing the efficiency of the injection aspect of the invention. FIG. **11** shows an injection radius expander, depicted generally at **128**, installed within the injection well **18** of the FIG. **3** embodiment. Injection radius expander **128** is installed within well bore **18** preferably near its deepest point. Expander **128** is disposed generally around liner **24**, coincidentally or subsequently to the installation of liner **24** itself. The expander **128** serves to provide lateral injection of substances radially outward from lower portions of a well **128**.

The principal components of expander **128** are shown in FIG. **11**, and include upper slip ring **132**, lower attachment ring **134**, and at least one (and preferably three to five) radial injection tube **136** with associated extension brace **138**. These principal components are comprised of strong, durable, corrosion-resistant materials, such as stainless steel or the like. Both slip ring **132** and attachment ring **134** are generally annular, with inside diameters conforming substantially to the outside diameter of well liner **24**. Slip ring **132** is not fixed to liner **24**, but rather is slidable axially along liner **24**. Attachment ring **134**, however, is securely (but perhaps temporarily) attached to the liner **24** so as not to be slidable along it. Radial injection tube **136** and extension brace **138** can be described as rigid rods, although radial injection tube **136** is hollow. Extension brace **138** is hingably connected to upper slip ring **132** and also is hingably connected to radial injection tube **136**. Radial injection tube **136** is hingably connected to attachment ring **134**. By this system of hingable connections, extension brace **138** and radial injection tube **136** are freely movable, with respect to each other, in the vertical plane containing them.

The operation of expander **128** readily can be understood by analogy to the operation of a common umbrella. In the analogy, the umbrella is upside-down and minus its canopy. The invention's well liner **24** is compared to the umbrella handle. Each radial injection tube **136** is analogized to the rigid ribs of the umbrella which support the umbrella canopy in its open position. In the "closed" position of this alternative embodiment, each extension brace **138** and its corresponding connected radial injection tube **136** are both vertical, with their mutual connection falling very approximately halfway between slip ring **132** and attachment ring **134** (which rings are maximally separated). The closed position fosters easy placement of the expander **128** within the confines of the well **18**. Because attachment ring **134** does not slide up or down, as the slip ring **132** is slidably moved down the "handle" or liner **24** towards the radial injection tubes **136**, the hinge between the extension brace

138 moves radially outward, causing the both the brace 138 and the tube 136 also to fold radially outward away from the liner 24, thus "opening" an array of one or more tubes 136, as shown in FIGS. 11, 13 and 14.

Once opened up within the aquifer 14, the expander serves to more widely disperse the injected substances by lengthening the radius of the "cone" of injection flow. In this alternative embodiment, substances are continued to be injected down the well 18 for release through screen 26 or other perforations in liner 24. But such injection may be supplemented by the injection of substances (typically at high pressure and low volume) through at least one flexible feed tube 130, which is disposed down the well 18 and leading to the surface. Feed tube 130 is in fluid connection with each radial injection tube 136, such that substances injected down feed tube 130 flow into and are emitted from the radial injection tube 136.

FIGS. 12–14 are enlarged views of the expander 128, detailing it major components and further disclosing its function. FIG. 12 shows the expander 128 disposed in its closed position around liner 24; FIG. 13 shows it in an "open" or extended position. Attachment ring 134 is fixed to liner 24 in a manner preventing attachment ring from moving up or down liner 24. Attachment ring 134 is hollow or otherwise includes interior passageways in fluid connection with feeder tube 130 which has a fitting through the wall of the ring 134. Upper slide ring 132, which can slide up or down liner 24, is shown at or near its maximum positional distance from attachment ring 134.

For the sake of illustrative clarity, FIGS. 12 and 13 depict only two sets of radial injection tubes 136,136' and extension braces 138,138'; FIG. 14 depicts three sets. It will be understood, however, that the objects and advantages of this embodiment of the invention may be realized using any number of radial injection tubes 136,136', although three or four, and typically no more than six, are preferred. Description of one radial injection tube 136, and its associated elements and use, serves to describe them all.

Radial injection tubes 136,136' are rigid hollow tubes. Cylindrical tubes will suffice, but it may be advantageous to utilize tubes with a triangular, oval, or other cross section which fosters movement of tubes 136,136' through the material of the aquifer 14. (Sharp edges may also be installed on the exterior of a cylindrical tube for the same reason.) Radial injection tubes 136,136' may have openings at their distal ends, or along their lengths, or both, as depicted at orifices 144,144' in FIGS. 12–14.

As shown in FIGS. 12–14, extension rods 138,138' are connected to radial injection tubes 136,136' by hinges 142, 142'. Hinges 142,142' permit movement of rods 138,138' and tubes 136,136' with respect to each other but preferably within the geometric plane defined by the rod and tube. Each extension brace 138 similarly is hingably connected to sliding ring 132 using hinges disposed radially about sliding ring 132. Proximal ends of radial injection tubes 136,136' likewise are hingably connected about the circumference of attachment ring 134 by means of tube hinges 140,140'. Tube hinges 140,140' are a type which permit the hollow interiors of radial injection tubes 136,136' to remain in continuous fluid communication with the interior passageway of attachment ring 134 without regard for the movement of tubes 136,136' with respect to attachment ring 134.

Operation of this alternative embodiment is described with reference first to FIG. 12. The expander is disposed within well 18 in the closed position shown in FIG. 12. After the expander is positioned at the desired location (with attachment ring 134 suitably affixed to liner 24), sleeve pipe 148 is lowered down the well 18 and around liner 24. Sleeve pipe 148 is lowered until it contacts the upper surface of slip ring 132, at which time sleeve pipe 148 is forcibly driven downward, preferably hydraulically by means known in the art. As sleeve pipe 148 is driven downward, it pushes slip ring 132 ahead of it, which in turn causes all extension rods 138,138' and radial injection tubes 136,136' to pivot in vertical planes radially outward from liner 24, by the action of hinges 142,142', tube hinges and the hinges connecting rods 138,138' to slip ring 132. Extension rods 138,138' and radial injection tubes 136,136' thus are forced through the surrounding aquifer medium; densely packed aquifer material will require that sleeve pipe 148 be hydraulically rammed with comparatively elevated force. Continued downward motion of sleeve pipe 148 results in a continuously decreasing angle between extension rods 138,138', until the assembly obtains the configuration shown in FIGS. 13 and 14. The motion potentially can continue until radial injection tubes 136,136' have reached a horizontal position; the precise angular positioning of tubes 136,136' is controllable through the manipulation of sleeve pipe 148.

With the apparatus configured as depicted in FIGS. 13 and 14, air, oxygen, oxygen-containing substances and the like may be pumped down feed tube 130. These substances move through feed tube 130 and through the interior of attachment ring 134, through tube hinges 140,140', and finally through the radial injection tubes 136,136'. The substances are then emitted through the orifices 144,144' in tubes 136,136' for broadened dispersion into the aquifer. Preferably, substances are simultaneously injected from the surface through screen 26 via the interior of liner 24.

FIG. 15 illustrates an alternative embodiment of the expander 128 shown in FIG. 11. This alternative embodiment is identical to the embodiment of FIGS. 12–14, except with respect to the mode of moving slip ring 132 downward. In this alternative embodiment, slip ring 132 is vertically penetrated by at least one threaded hole, through each of which a threaded jack screw 150 is screwed. One (or more) jack screw 150 also passes through an unthreaded hole vertically penetrating attachment ring 134 and so aligned as to cause the vertical positioning of jack screw 150 as shown. Jack screw 150 is free to rotate in the hole through attachment ring 134, but is fitted with retaining washers or other means known in the art for preventing jack screw 150 from moving axially upward or downward with respect to attachment ring 134. Accordingly, as shank 152 of jack screw 150 is rotated, by mechanical and/or electrical means known in the art, the screwing interaction between jack screw 150 and slip ring 132, together with the vertical immobility of jack screw 150, causes slip ring 132 to be mechanically drawn toward attachment ring 134, resulting in the "opening" of the radial injection tubes 136,136', as previously described. Counter-rotation of the jack screw 150 will retract the tubes 136,136' inward, as slip ring 132 is forced upward by the screwing action.

Although the invention has been described with reference to these preferred embodiments, other embodiments can achieve the same results. Variations and modifications of the present invention will be obvious to those skilled in the art and it is intended to cover in the appended claims all such modifications and equivalents. The entire disclosures of all applications, patents, and publications cited above, and of the corresponding application are hereby incorporated by reference.

We claim:

1. A method of in situ removal of contaminants from soil or from ground water, the method comprising the steps of:

a) establishing in situ at least one injection well into the ground water;

b) providing an oxygen-containing substance to the contaminants to volatilize and biodegrade the contaminants in the ground water and soil;

c) permitting upward migration of the volatilized and biodegraded contaminants without one or more venting conduits; and

d) increasing the rate of biodegradation by augmenting available oxygen to microorganisms present in the soil or ground water.

2. The method of claim **1** wherein the step of providing the oxygen-containing substance comprises injecting at least one substance selected from the group consisting of oxygen-containing fluids and solids into the injection well.

3. The method of claim **2** wherein the oxygen-containing substance comprises an oxygen-containing fluid comprising at least one fluid selected from the group consisting of oxygen, air, peroxides, NO_x compounds and SO_x compounds.

4. The method of claim **2** wherein the oxygen-containing substance comprises a solid selected from the group consisting of NO_x compounds, SO_x compounds, and peroxide compounds.

5. The method of claim **2** additionally comprising the step of providing microorganisms in situ.

6. The method of claim **5** additionally comprising the step of providing nutrients/food to the microorganisms.

7. The method of claim **1** wherein the step of providing oxygen-containing substance comprises the step of laterally dispersing substances radially outward from the injection well.

8. The method of claim **7**, wherein the step of laterally dispersing substances comprises the steps of:

a) vertically disposing at least one injection tube within the injection well;

b) transporting the substances vertically downward into the injection well to the injection tube; and

c) moving the injection tube radially outward from the injection well.

9. The method of claim **1** additionally comprising the steps of:

e) sampling soil or water;

f) isolating at least one microorganism useful in biodegrading the contaminants;

g) fermenting the isolated microorganisms to increase their population; and

h) inserting the fermented microorganisms in situ.

10. An apparatus for in situ removal of contaminants from soil or from ground water, said apparatus comprising:

at least one injection well extending into the ground water;

means for providing an oxygen-containing substance to the contaminants to volatilize and biodegrade the contaminants in the ground water and soil;

means for permitting upward migration of said volatilized and biodegraded contaminants without one or more venting conduits; and

means for increasing the rate of biodegradation by augmenting available oxygen to microorganisms present in the soil or ground water.

11. The apparatus of claim **10** wherein the means for providing the oxygen-containing substance to contaminants comprises means for injecting at least one substance selected from the group consisting of oxygen-containing fluids and solids into said injection well.

12. The apparatus of claim **11** wherein the oxygen-containing substance comprises an oxygen-containing fluid comprising at least one fluid selected from the group consisting of oxygen, air, peroxides, NO_x compounds and SO_x compounds.

13. The apparatus of claim **11** wherein the oxygen-containing substance comprises a solid selected from the group consisting of NO_x compounds, SO_x compounds, and peroxide compounds.

14. The apparatus of claim **10** wherein the means for providing an oxygen-containing substance further comprises means for laterally dispersing substances radially outward from the injection well.

15. The apparatus of claim **14** wherein said means for providing an oxygen-containing substance comprises:

means for transporting said substances vertically downward into said injection well;

at least one injection tube vertically disposable within said injection well and in fluid communication with said means for transporting and; and

means for moving said injection tube radially outward from said injection well.

16. A method of in situ removal of contaminants from soil or from ground water, the method comprising the steps of:

a) establishing in situ at least one injection well into the ground water;

b) providing an oxygen-containing substance to the contaminants to volatilize and biodegrade the contaminants in the ground water and soil;

c) permitting upward migration of the volatilized and biodegraded contaminants without one or more venting conduits; and

d) providing microorganisms into the subsurface.

17. The method of claim **16** wherein the step of providing the oxygen-containing substance comprises injecting at least one substance selected from the group consisting of oxygen-containing fluids and oxygen-containing solids into the injection wells.

18. The method of claim **17** wherein the oxygen-containing substance comprises at least one member selected from the group consisting of oxygen, air, peroxides, NO_x compounds and SO_x compounds.

19. The method of claim **16** additionally comprising the step of providing microorganisms in situ.

20. The method of claim **16** additionally comprising the step of providing nutrients/food to the microorganisms.

21. The method of claim **16** additionally comprising the steps of:

(e) sampling soil or water;

(f) isolating at least one microorganism useful in biodegrading the contaminants;

(g) fermenting the isolated microorganisms to increase their population; and

(h) inserting the fermented microorganisms in situ.

22. The method of claim **16** wherein the step of providing oxygen-containing substance comprises the step of laterally dispersing substances radially outward from the injection well.

23. The method of claim **22**, wherein the step of laterally dispersing substances comprises the steps of:

a) vertically disposing at least one injection tube within the injection well;

b) transporting the substances vertically downward into the injection well to the injection tube; and

c) moving the injection tube radially outward from the injection well.

24. The method of claim **23** wherein the step of transporting comprises the step of forcing through a flexible feeder tube.

25. The apparatus of claim **23** wherein the step of transporting comprises the step of forcing through a well liner.

26. The method of claim **23** wherein the step of moving the injection tube radially outward comprises the step of pivoting the injection tube outward from the injection well.

27. The method of claim **26** wherein the step of pivoting comprises the steps of:

a) vertically disposing a rigid member in the well; and

b) hingably connecting the injection tube to the rigid member.

28. The method of claim **27** wherein the step of vertically disposing a rigid member comprises the step of installing a well liner.

29. The method of claim **27** further comprising the steps of:

a) slidably disposing a slip ring member around the rigid member;

b) hingably connecting an extension rod to the injection tube;

c) hingably connecting the extension rod to the slip ring member; and

d) vertically sliding the slip ring member along said rigid member.

30. An apparatus for in situ removal of contaminants from soil or from ground water, said apparatus comprising:

at least one injection well extending into the ground water;

means for providing an oxygen-containing substance to the contaminants to volatilize and biodegrade the contaminants in the ground water and soil;

means for permitting upward migration of the volatilized and biodegraded contaminants without one or more venting conduits; and

means for providing microorganisms into the subsurface.

31. The apparatus of claim **30** wherein the means for providing an oxygen-containing substance to contaminants comprises means for injecting at least one substance selected from the group consisting of oxygen-containing fluids and oxygen-containing solids into said injection well.

32. The apparatus of claim **31** wherein the oxygen-containing substance comprises at least one member selected from the group consisting of oxygen, air, peroxides, NO_x compounds and SO_x compounds.

33. A method of in situ removal of contaminants from soil or from ground water, the method comprising the steps of:

a) establishing in situ at least one injection well into the ground water;

b) providing an oxygen-containing substance to the contaminants to volatilize and biodegrade the contaminants in the ground water and soil;

c) permitting upward migration of the volatilized and biodegraded contaminants without one or more venting conduits;

d) sampling soil or water;

e) isolating at least one microorganism useful in biodegrading the contaminants;

f) fermenting the isolated microorganisms to increase their population; and

g) inserting the fermented microorganisms in situ.

34. The method of claim **33** wherein the step of providing the oxygen-containing substance comprises injecting at least one substance selected from the group consisting of oxygen-containing fluids and oxygen-containing solids into the injection wells.

35. The method of claim **34** wherein the oxygen-containing substance comprises an oxygen-containing fluid comprising at least one fluid selected from the group consisting of oxygen, air, peroxides, NO_x compounds and SO_x compounds.

36. The method of claim **33** wherein the oxygen-containing substance comprises a solid selected from the group consisting of NO_x compounds, SO_x compounds, and peroxide compounds.

37. The method of claim **33** additionally comprising the step of providing nutrients/food to the microorganisms in situ.

38. A method of in situ removal of contaminants from soil or from ground water, the method comprising the steps of:

a) establishing in situ at least one injection well into the ground water;

b) providing an oxygen-containing substance to the contaminants to volatilize and biodegrade the contaminants in the ground water and soil;

c) permitting upward migration of the volatilized and biodegraded contaminants without one or more venting conduits;

d) providing an elongated tube reservoir capped at one end;

e) providing entry ports in the elongated tube reservoir;

f) surrounding the entry ports with filtration means; and

g) collecting contaminants in the elongated tube reservoir by passage thereof through the filtration means.

39. The method of claim **38** wherein the step of providing the oxygen-containing substance comprises injecting at least one substance selected from the group consisting of oxygen-containing fluids and oxygen-containing solids into the injection well.

40. The method of claim **39** wherein the oxygen-containing substance comprises at least one member selected from the group consisting of oxygen, air, peroxides, NO_x compounds and SO_x compounds.

41. The method of claim **38** additionally comprising the step of providing microorganisms in situ.

42. The method of claim **41** additionally comprising the step of providing nutrients/food to the microorganisms.

43. The method of claim **38** additionally comprising the steps of:

(h) sampling soil or water;

(i) isolating at least one microorganism useful in biodegrading the contaminants;

(j) fermenting the isolated microorganisms to increase their population; and

(k) inserting the fermented microorganisms in situ.

44. An apparatus for in situ removal of contaminants from soil or from ground water, said apparatus comprising:

at least one injection well extending into the ground water;

means for providing an oxygen-containing substance to the contaminants to volatilize and biodegrade the contaminants in the ground water and soil;

means for permitting upward migration of said volatilized and biodegraded contaminants without one or more venting conduits;

an elongated tube reservoir capped at one end and com-

prising entry ports therein;

filtration means surrounding said entry ports; and

means for collecting contaminants which enter said elongated tube reservoir by passage through said filtration means.

45. The apparatus of claim **44** wherein the means for providing the oxygen-containing substance to contaminants comprises means for injecting at least one substance selected from the group consisting of oxygen-containing fluids and oxygen-containing solids into said injection well.

46. The apparatus of claim **45** wherein the oxygen-containing substance comprises an oxygen-containing fluid comprising at least one fluid selected from the group consisting of oxygen, air, peroxides, NO_x compounds and SO_x compounds.

47. The apparatus of claim **45** wherein the oxygen-containing substance comprises a solid selected from the group consisting of NO_x compounds, SO_x compounds and peroxide compounds.

48. A method of in situ removal of contaminants from soil or ground water, the method comprising the steps of:

a) establishing in situ at least one venting lateral means comprising gas-permeable openings therein;

b) establishing in situ at least one injection wells;

c) providing an oxygen-containing substance to the contaminants; and

d) placing vertical venting means comprising sand beneath the venting lateral means;

whereby volatile contaminants in the ground water or soil are removed through the venting lateral means.

49. The method of claim **48** wherein the step of providing the oxygen-containing substance comprises injecting at least one substance selected from the group consisting of oxygen-containing fluids and oxygen-containing solids into the injection wells.

50. The method of claim **49** wherein the oxygen-containing substance comprises at least one member selected from the group consisting of oxygen, air, peroxides, NO_x compounds and SO_x compounds.

51. The method of claim **48** further comprising the step of applying a vacuum to the venting lateral means.

52. The method of claim **48** additionally comprising the step of providing microorganisms in situ.

53. The method of claim **52** additionally comprising the step of providing nutrients/food to the microorganisms.

54. The method of claim **48** additionally comprising the steps of:

e) sampling soil or water;

f) isolating at least one microorganism useful in biodegrading the contaminants;

g) fermenting the isolated microorganisms to increase their population; and

h) inserting the fermented microorganisms in situ.

55. The method of claim **48** wherein the placing step comprises placing vertical venting means comprising a gas-permeable chimney beneath the venting lateral means.

56. The method of claim **48** wherein the placing step comprises placing vertical venting means beneath one or more of the gas-permeable openings of the venting lateral means.

57. The method of claim **48** wherein the placing step comprises the step of placing vertical venting means comprising a venting well, having gas-permeable openings therein, beneath the venting lateral means, the venting well being fluidly connected to the venting lateral means.

58. An apparatus for in situ removal of contaminants from soil or ground water, said apparatus comprising:

venting lateral means having gas-permeable openings therein;

at least one injection well;

means for providing an oxygen-containing substance, the oxygen-containing substance comprising at least one substance selected from the group consisting of oxygen-containing fluids and oxygen-containing solids, to the contaminants;

vertical venting means comprising sand beneath said venting lateral means; and

whereby volatile contaminants in the ground water or soil are removed through said venting lateral means.

59. The apparatus of claim **58** further comprising means for applying a vacuum to said venting lateral means.

60. The apparatus of claim **58** wherein said vertical venting means comprises a venting well having gas-permeable openings therein, said venting well being fluidly connected to said venting lateral.

61. A method of in situ gas sparging and bioremediation for removal of contaminants from soil or from ground water present in the soil in the form of a ground water aquifer, there being a vadose zone existing down to a water table defining the upper boundary of the ground water aquifer, the method comprising the steps of:

a) establishing one or more injection wells extending through the vadose zone to a depth below the water table;

b) establishing one or more extraction wells in the vadose zone extending to a depth above the water table;

c) providing an oxygen-containing substance to the contaminants;

d) stimulating with the oxygen-containing substance microorganisms present in the soil or the ground water;

e) increasing the rate of biodegradation of volatile and non-volatile contaminants by providing in situ oxygen in the oxygen-containing substance; and

f) extracting, via the one or more extraction wells, an effluent containing volatile contaminants and biodegradation by-products of both volatile and non-volatile contaminants from the soil or the ground water.

62. The method of claim **61** wherein the step of providing the oxygen-containing substance to the contaminants comprises injecting at least one substance selected from the group consisting of oxygen-containing fluids and oxygen-containing solids.

63. The method of claim **62** wherein the oxygen-containing substance comprises at least one member selected from the group consisting of oxygen, air, peroxides, NO_x compounds and SO_x compounds.

64. The method of claim **61** additionally comprising the step of providing microorganisms into the subsurface.

65. The method of claim **64** additionally comprising the step of providing nutrients/food to the microorganisms in the subsurface.

66. The method of claim **61** additionally comprising the steps of:

(g) sampling soil or water;

(h) isolating at least one microorganism useful in biodegrading the contaminants;

(i) fermenting the isolated microorganisms to increase their population; and

(j) inserting the fermented microorganisms into the sub-

surface.

67. The method of claim **61** wherein the step of establishing one or more extraction wells comprises establishing one or more extraction wells comprising gas-permeable openings at an upper portion thereof.

68. The method of claim **61** wherein the step of establishing one or more extraction wells comprises establishing one or more vertical extraction wells.

69. The method of claim **61** wherein the step of establishing one or more extraction wells comprises establishing in situ venting lateral means comprising gas-permeable openings therein.

70. The method of claim **69** additionally comprising the step of placing vertical venting means comprising a gas-permeable chimney beneath the venting lateral means.

71. The method of claim **70** wherein the placing step comprises placing the vertical venting means beneath one or more of the gas-permeable openings of the venting lateral means.

72. The method of claim **70** wherein the placing step comprises placing vertical venting means comprising a high permeability, low capillary lift fill material.

73. The method of claim **70** wherein the placing step comprises placing vertical venting means comprising a venting well, comprising gas-permeable openings therein, beneath the venting lateral means, the venting well being fluidly connected to the venting lateral means.

74. The method of claim **61** wherein the microorganism stimulating step comprises continuously stimulating the microorganisms with the oxygen-containing substance.

75. The method of claim **61** wherein the step of increasing the rate of biodegradation comprises augmenting available oxygen introduced in situ via the injection wells.

76. The method of claim **61** wherein the extracting step comprises applying a vacuum to one or more of the extraction wells.

77. The method of claim **76** wherein the step of applying a vacuum comprises applying a vacuum at a negative flow.

78. The method of claim **77** wherein the step of applying a vacuum at a negative flow comprises applying a vacuum at a negative flow which is volumetrically greater than a positive flow of fluid injected into the one or more injection wells.

79. The method of claim **61** wherein the step of establishing one or more extraction wells comprises establishing at least one extraction well comprising a condensate drain.

80. The method of claim **61** additionally comprising the step of providing microorganisms into the soil or the ground water.

81. The method of claim **61** additionally comprising the step of providing nutrients/food to microorganisms in the soil or the ground water.

82. The method of claim **61** wherein the step of establishing one or more extraction wells comprises placing gas-permeable but low capillary-lift fill material below gas-permeable openings in one or more of the extraction wells.

83. An apparatus for in situ gas sparging and bioremediation for removal of contaminants from soil and from ground water present in the soil in the form of a ground water aquifer, there being a vadose soil zone existing down to a water table defining the upper boundary of the ground water aquifer, said apparatus comprising:

one or more injection wells extending through the vadose zone to a depth below the water table;

one or more extraction wells in the vadose zone extending to a depth above the water table;

means for providing an oxygen-containing substance to the contaminants, the oxygen-containing substance comprising at least one substance selected from the group consisting of oxygen-containing fluids and oxygen-containing solids;

means for stimulating via the oxygen-containing substance microorganisms present in the soil or the ground water and increasing the rate of biodegradation of volatile and non-volatile contaminants; and

means for extracting, via the one or more extraction wells, an effluent containing volatile contaminants and biodegradation by-products of both volatile and non-volatile contaminants from the soil or the ground water.

84. The apparatus of claim **83** wherein said one or more extraction wells comprises a vertical extraction well.

85. The apparatus of claim **83** wherein said one or more extraction wells comprises gas-permeable openings at an upper portion thereof.

86. The apparatus of claim **83** wherein said one or more extraction wells comprises in situ venting lateral means comprising gas-permeable openings therein.

87. The apparatus of claim **86** additionally comprising vertical venting means comprising a gas-permeable chimney disposed beneath said venting lateral means.

88. The apparatus of claim **87** wherein said vertical venting means is disposed beneath one or more of said gas-permeable openings in said venting lateral means.

89. The apparatus of claim **87** wherein said vertical venting means comprises a high permeability, low capillary lift fill material.

90. The apparatus of claim **87** wherein said vertical venting means comprises venting well means, comprising gas-permeable openings therein, beneath the venting lateral means, said venting well means being fluidly connected to said venting lateral means.

91. The apparatus of claim **83** wherein said extracting means comprises means for applying a vacuum to one or more of said extraction wells.

92. The apparatus of claim **91** wherein said means for applying a vacuum comprises means for applying a vacuum at a negative flow.

93. The apparatus of claim **92** wherein said means for applying a vacuum at a negative flow comprises means for applying a vacuum at a negative flow which is volumetrically greater than a positive flow of fluid injected into said one or more injection wells.

94. The apparatus of claim **83** wherein said one or more extraction wells comprises gas-permeable but low capillary-lift fill material below gas-permeable openings in one or more of said extraction wells.

95. An apparatus for laterally dispersing substances outward from an injection well, said apparatus comprising:

means for transporting said substances vertically downward into said injection well;

at least one injection tube vertically disposable around said injection well and in fluid communication with said means for transporting; and

means for moving said injection tube radially outward from said injection well comprising means for pivoting said injection tube outward from said injection well, said pivoting via a rigid well liner vertically disposed in said well; hinge means for connecting said injection tube to said rigid well liner; a slip ring member slidably disposed around said rigid well liner and extension rod hingably connected to said injection tube and hingably connected to said slip ring member; and

means for vertically sliding said slip ring member along said rigid well liner.

96. The apparatus of claim **95** wherein said means for vertically sliding comprises a sleeve pipe slidably disposed around said vertically disposed well liner above said slip ring member.

97. The apparatus of claim **95** wherein said means for vertically sliding comprises a jack screw screwably disposed through said slip ring member.

* * * * *